CATALOG 211-1

TECNARA®

N/C TOOLING SYSTEMS

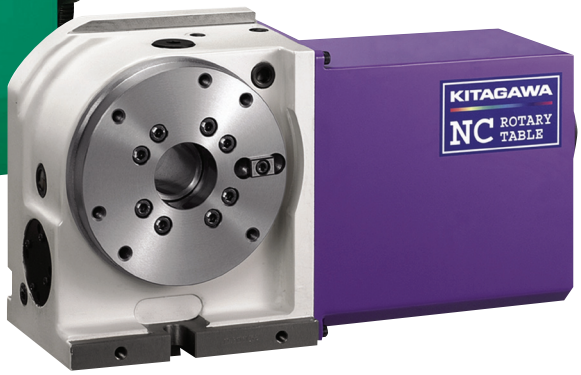

www.tecnaratools.com

ALPHABETICAL INDEX

A
Angle Attachments, Fixed Type 23
Angle Attachments, Flange Type 28
Angle Attachments, HALF 33
Angle Attachments, Modular Type 5
Angle Attachments, Modular Type Extension 12
Angle Attachments, Universal HALF 44

C
Collet Chucks, CTA 81
Collet Chucks, DETa-1 91
Collet Chucks, ER Micro Milling Chucks 120
Collet Chucks, Millmax Milling Chucks 117
Collet Chucks, TG Collet Chucks 134
Collet Chucks, DETa-1 030 Series 99
Collets, CTA 90
Collets, DETa-1 92
Collets, ER Micro Milling Chucks 128
Collets, MILLMAX Milling Chucks 119
Collets, DETa-1 030 Series 102
Collets, TG Collet Chucks 137
Collet Nut, CTA 89
Collet Nut, ER Micro Milling Chucks 155
Collet Nut, TG Collet Chucks 155
Coolant Nut, ER Micro Milling Chucks 132
Coolant Discs, ER Micro Milling Chucks 132

E
End Mill Holders, Set Screw Type 108
End Mill Holders, Set Screw Type - Extension 116

H
Heaters, Slimline Shrink-Fit 80
High Speed Heads, Leuter 142

I
MACDEX Indexers 216

M
MACmini Controllers, Rotary Tables 214
Millmax Milling Chucks 117

N
NSK Adapters for RAA, Modular Type 13

R
Retention Knobs 151
Rotary Tables 171

S
Screws - Arbor Screws, Set Screws 153
Shell End Mill Arbors 103
Shrink-Fit, Heaters 80
Slimline, Shrink-Fit 57

T
Tap Adapters, Positive Drive 141
Tap Collets for Synchro Tap 157
Tap Holders 138
Tap Sleeves, for RAA, Half & Universal Half 53
Test Bars 161
Tool Boy 159
Tool Locking Fixtures 158

U
Universal Angle Attachments, HALF 44

W
Wrenches, CTA 156
Wrenches, DETa-1 B and E-Type 98
Wrenches, DETa-1 A-Type 156
Wrenches, ER Micro Milling Chucks 155
Wrenches, MILLMAX Milling Chucks 156
Wrenches, DETa-1 030 Series 102
Wrenches, Slimline 78
Wrenches, TG Collet Chucks 156

Y
Yuken Kiriko Chip Compactor 163

Z
Zero Setters 162

SPECIFICATIONS SUBJECT TO CHANGE WITHOUT NOTICE

HIGHLIGHTS OF TECNARA QUALITY PRODUCTS

ANGLE ATTACHMENTS, MODULAR
PAGE 5

ANGLE ATTACHMENTS, HALF
PAGE 33

ANGLE ATTACHMENTS, SOLID
PAGE 23

ANGLE ATTACHMENTS, UNIV. HALF
PAGE 44

ANGLE ATTACHMENTS, FLANGE
PAGE 28

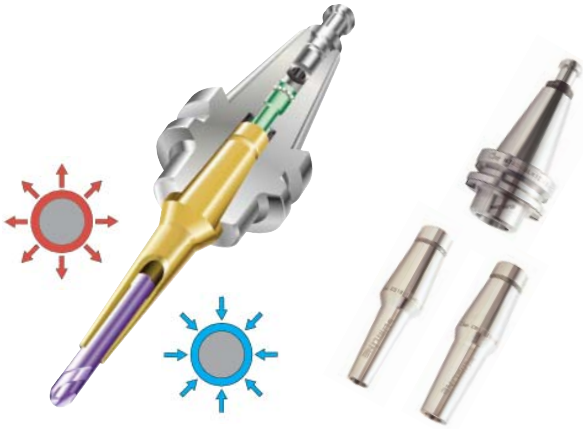

SHRINK-FIT CHUCKING SYSTEM
PAGE 57

HIGHLIGHTS OF TECNARA QUALITY PRODUCTS

CTA-CTH COLLET CHUCKS
PAGE 81

ENDMILL HOLDERS
PAGE 108

DETa-1 COLLET CHUCKS
PAGE 91

MILLMAX MILLING CHUCKS
PAGE 117

SHELL ENDMILL HOLDERS
PAGE 103

ER MICRO MILLING CHUCKS
PAGE 120

HIGHLIGHTS OF TECNARA QUALITY PRODUCTS

TG COLLET CHUCKS

PAGE 134

TOOL BOYS

PAGE 159

TAP HOLDERS

PAGE 138

YUKEN KIRIKO CHIP COMPACTORS

PAGE 163

LEUTER HI SPEED HEADS

PAGE 142

KITAGAWA ROTARY TABLES

PAGE 171

MST RITE ANGLE ATTACHMENTS

MODULAR TYPE

PATENTED

SYSTEM DIAGRAM

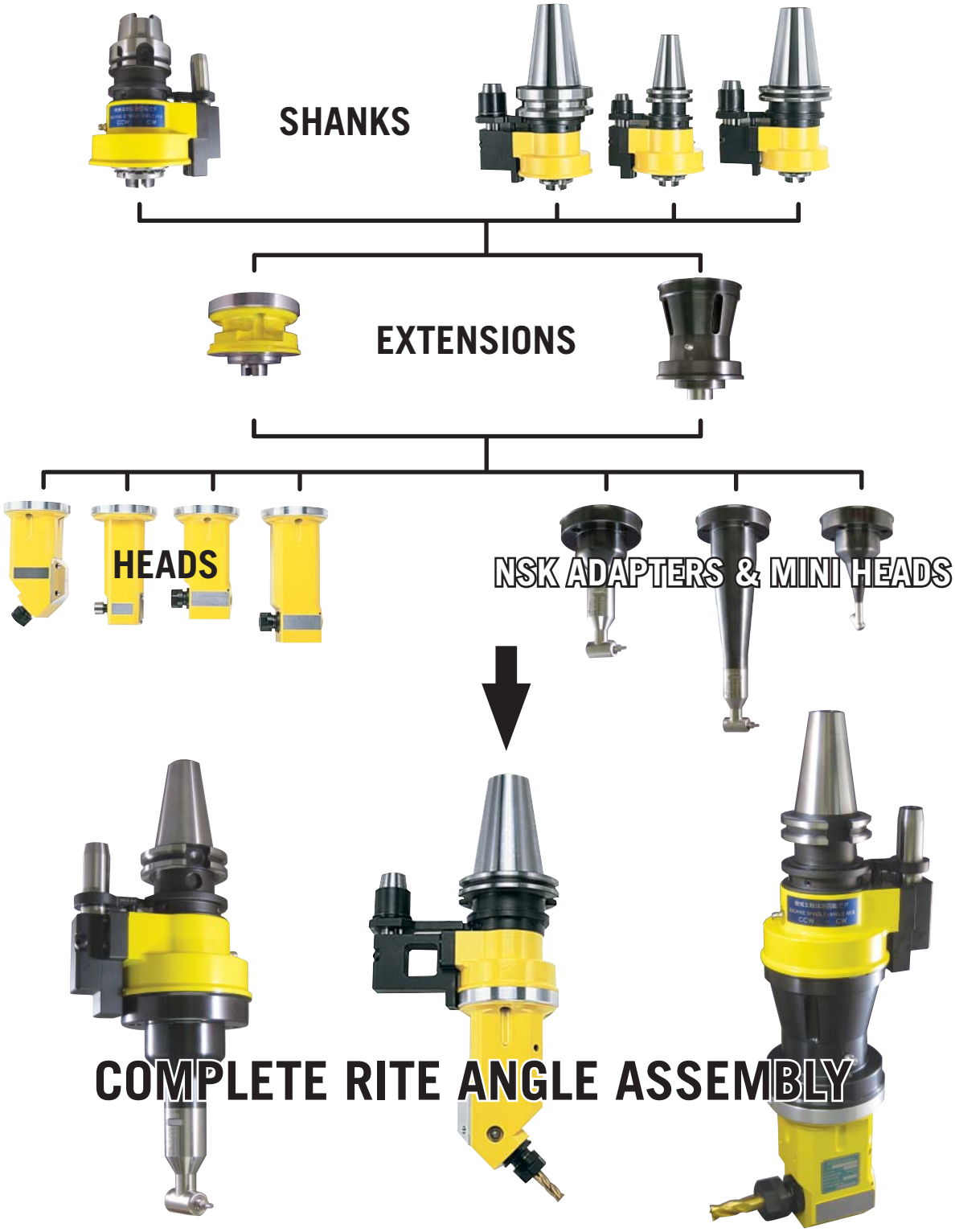

Note: Other shank configurations, such as R8, are available upon request.

MST RITE ANGLE ATTACHMENTS

MODULAR TYPE

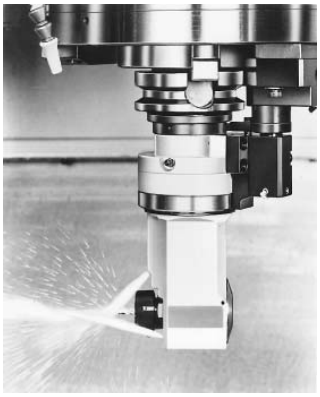

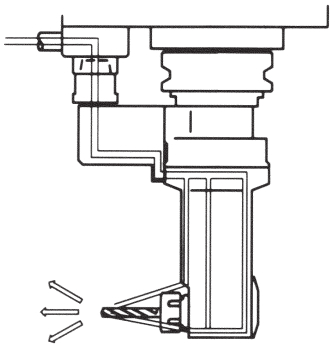

4 coolant passages

- A WIDE VARIETY OF SHANKS, ANGLE HEADS, AND ACCESSORIES
- A WIDE VARIETY OF PROJECTIONS AND COLLET RANGES
- A RUGGED CAST IRON BODY DESIGN
- JIG-BORER FINISH BEARING POCKETS FOR OPTIMUM PERFORMANCE
- MECHANICALLY DRIVEN MINI SERIES WITH NSK ANGLE ATTACHMENT
- HARDENED PRECISION SPIRAL BEVEL GEARS FOR OPTIMUM RIGIDITY
- GUARANTEED ACCURACY – .0002" T.I.R. AT THE CAVITY
- EXTREMELY HIGH SPEED – 6000 R.P.M. (10,000 R.P.M. FOR MINIATURE VERSION)
- COOLANT THRU BODY DESIGN ELIMINATES HEAT AND SPLASH COOLANT AT CUTTING ACTION
- CUTTING DIRECTION ANYWHERE FROM 0° TO 360°

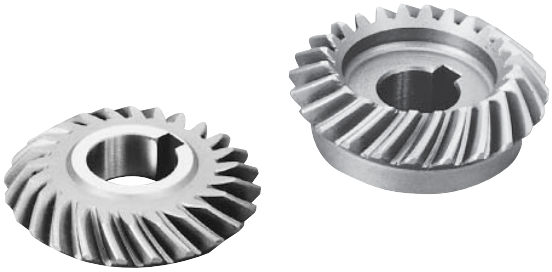

MST RITE ANGLE ATTACHMENTS
MODULAR TYPE

ORIENTATION RING
Free selection of angle setting in relation to spindle drive keys and positioning block.

POSITIONING PIN
Coolant (water, oil or air) thru type

PIN BLOCK
guides the positioning pin accurately without any tilt, and provides constant spring pressure at all times.

ANGLE CLAMPING BOLTS
Built-in bolts engage with keys to establish the rugged structure.

SPLASH COOLANT
4 coolant outlets are directed thru body at cutting action.

DATUM FACE
Cutting direction can easily be set by indicating the datum face.

COLLET
Industrial standard

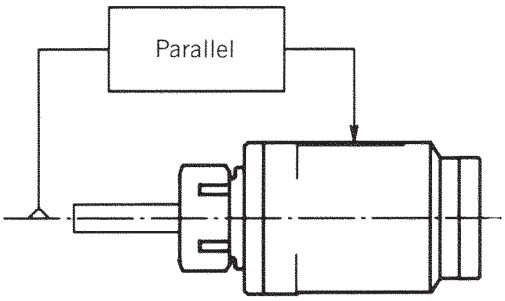

MST RITE ANGLE ATTACHMENTS
MODULAR TYPE

TYPICAL APPLICATIONS

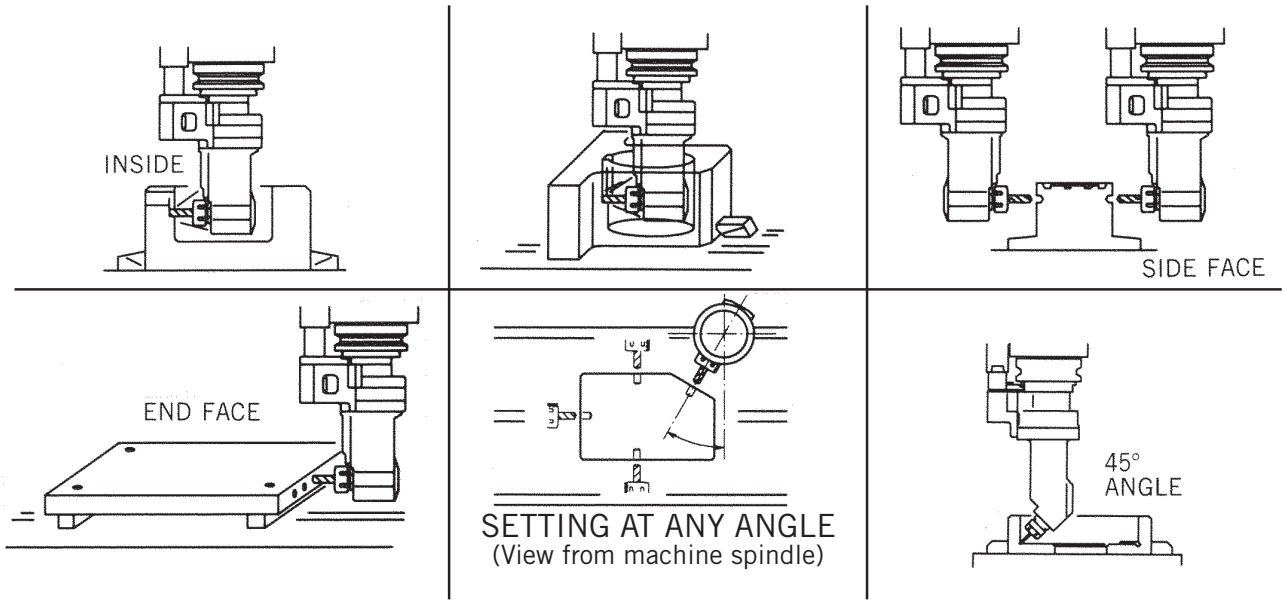

CUTTING DATA

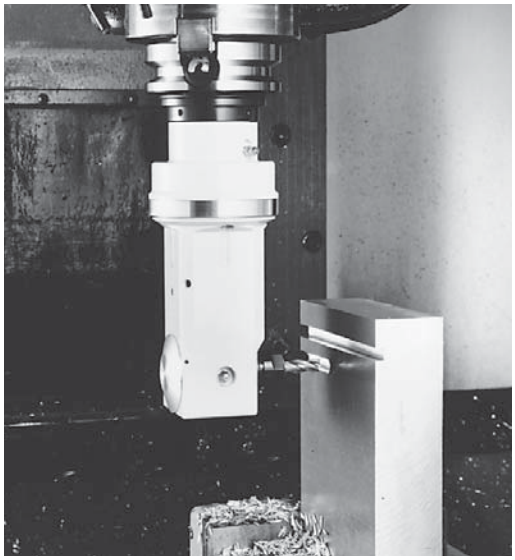

MODEL : 150-162-6

WORKPIECE	SIZE OF END MILL	DEPTH OF CUT	R.P.M.	FEED*	FINISH
Aluminum	.394 dia. 2 Flute H.S.S. End Mill	.200	2500	9.84	Good
Cast Iron			800	3.15	Good
Steel			640	2.36	Good
Stainless			640	2.36	Good

MODEL : 150-164-5

WORKPIECE	SIZE OF END MILL	DEPTH OF CUT	R.P.M.	FEED*	FINISH
Aluminum	.236 dia. 2 Flute H.S.S. End Mill	.200	3000	5.91	Good
Cast Iron		.120	1400	3.94	Good
Steel			1100	3.15	Good
Stainless			1100	2.36	Good

Note: * means inch per minute.

MST RITE ANGLE ATTACHMENTS
MODULAR TYPE

DIMENSIONAL OUTLINE OF ANGLE HEADS

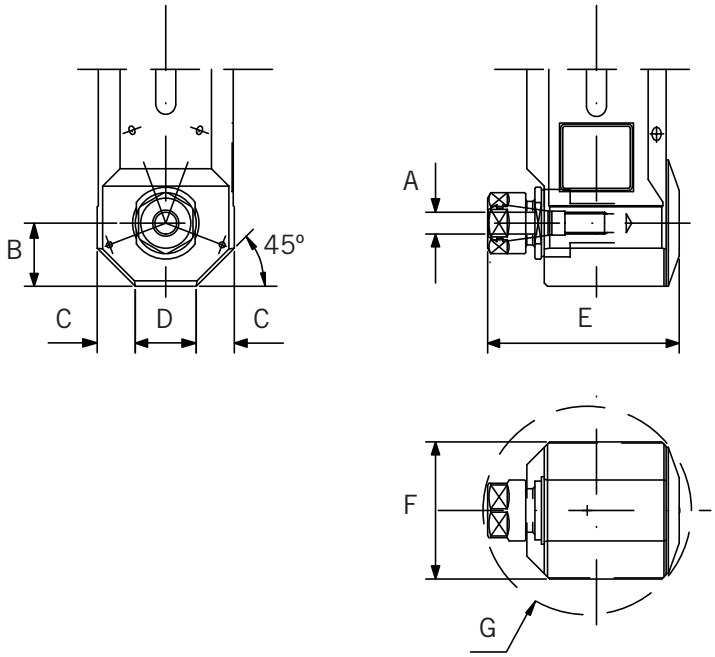

MODEL	COLLET	RANGE A	B	C	D	E	F	G
159	#107 (ER20)	.039 -.511	1.14	.69	1.1	3.78	2.48	4.10
162	#103 (ER16)	.039 -.393	1.14	.69	1.1	3.46	2.48	3.80
164	#102 (ER11)	.019 -.275	.87	.57	1.1	2.72	2.24	2.90
165	#101 (ER8)	.019 -.196	.79	.41	1.03	2.24	1.85	2.50

GUARANTEED ACCURACIES

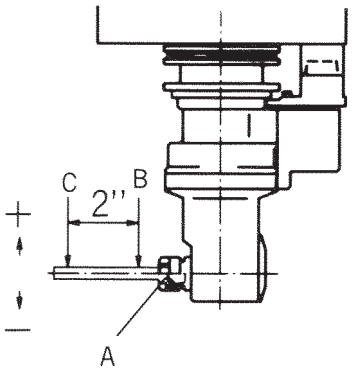

Example of Order No.

140 - 162 - 3

- 3 — Approx. Projection Length of Angle Head only – 3"
- 162 — Angle Head and Collet Range (.020-.394")
- 140 — V Flange Tool Shank #40 Taper

Cavity at Bore	A	.0002" TIR
Test Bar at Face	B	.0004" TIR
Test Bar at 2"	C	.0006" TIR
Deviation of Angle (high or low of C under B = 0)	90˚	±.0004" TIR

MST RITE ANGLE ATTACHMENTS

MODULAR SHANKS

V FLANGE TOOL SHANK (FIG. 1)

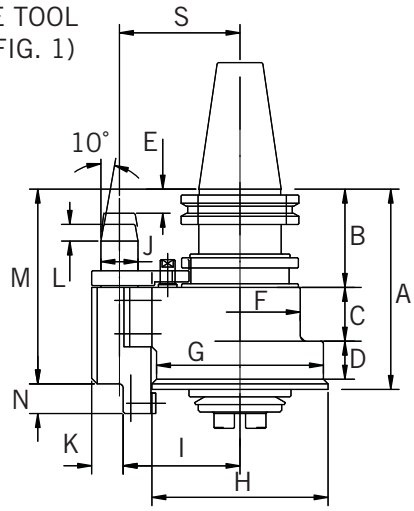

BT FLANGE TOOL SHANK (FIG. 2)

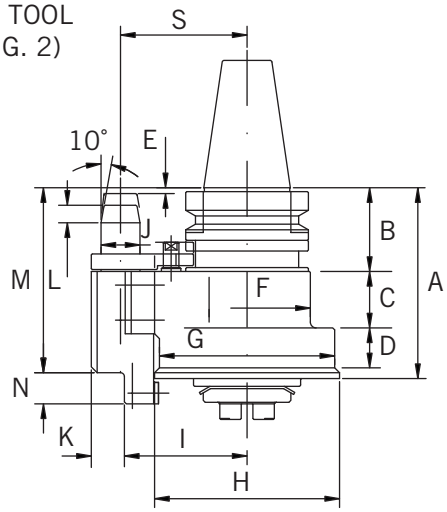

HSK FLANGE TOOL SHANK (FIG. 3)

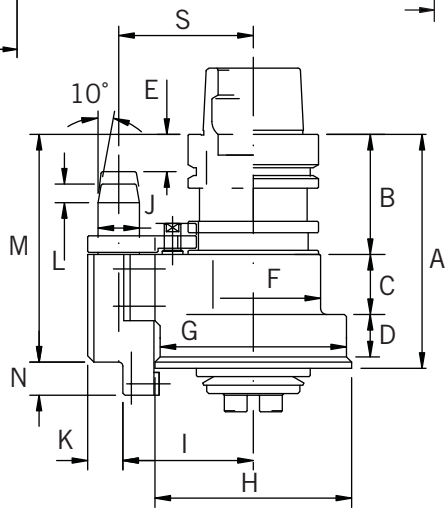

ORDER NO.	TAPER	A	B	C	D	E	F (DIA)	G (DIA)	H (DIA)
140 SHANK	CAT40	4.25	2.09	1.14	0.81	0			
150 SHANK	CAT50	4.25	2.09	1.14	0.81	.12			
240 SHANK	BT40	3.86	1.69	1.14	0.81	0	ø2.56	ø3.54	ø3.74
063 SHANK	HSK63A	4.45	2.28	1.14	0.81	0			
100 SHANK	HSK100A	4.45	2.28	1.14	0.81	.12			

ORDER NO.	I	J (DIA)	K	L	M	N	S*	WT (lb.)	FIG
140 SHANK	2.48	ø.79	.67	.35	4.13		2.56	8.0	1
150 SHANK	2.22	ø1.10	1.71	.47	4.13		4.33	13.5	1
240 SHANK	2.48	ø.79	.67	.35	3.74	.63	2.56	7.8	2
063 SHANK	2.48	ø.79	.67	.35	4.33		2.56	7.9	3
100 SHANK	2.22	ø1.10	1.52	.47	4.33		4.33	12.8	3

Note: * means other optional S dimensions are available: 2.36 for CAT40, BT40 & HSK63A and 3.15 and 3.35 for CAT50 & HSK100A.

MST RITE ANGLE ATTACHMENTS

MODULAR HEADS

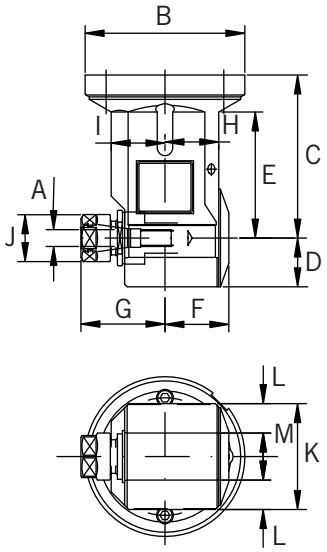

FIG. 1

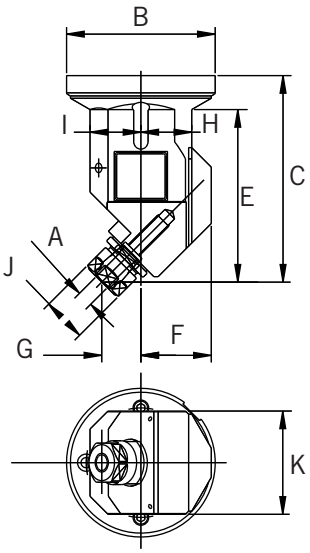

FIG. 2

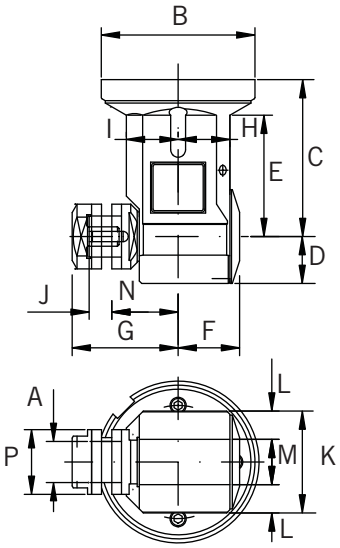

FIG. 3

ORDER NO.	COLLET	A	B (DIA)	C	D	E	F	G
159-3 HEAD	#107(ER20)	.039 – .511		3.82	1.14	2.95	1.5	2.28
159-6 HEAD	#107(ER20)	.039 – .511		6.18	1.14	5.31	1.5	2.28
162-3 HEAD	#103(ER16)	.039 – .393		3.82	1.14	2.95	1.5	1.97
162-6 HEAD	#103(ER16)	.039 – .393		6.18	1.14	5.31	1.5	1.97
164-2 HEAD	#102(ER11)	.019 – .275		3.23	.87	2.52	1.14	1.69
164-5 HEAD	#102(ER11)	.019 – .275	ø3.74	5.59	.87	4.88	1.14	1.69
165-3 HEAD	#101(ER8)	.019 – .196		4.41	.79	3.5	.98	1.26
165-6 HEAD	#101(ER8)	.019 – .196		6.77	.79	5.87	.98	1.26
262-4 HEAD	#103(ER16)	.039 – .393		5.2	—	4.34	1.77	.98
198-3 HEAD	—	1.00		3.82	1.14	2.95	1.50	2.58

ORDER NO.	H	I	J	K	L	M	N	P	WT (lb.)	FIG.
159-3 HEAD	1.26	1.26	1.34	2.48	.69 X 45	1.1			5.8	1
159-6 HEAD	1.26	1.26	1.34	2.48	.69 X 45	1.1			9.6	1
162-3 HEAD	1.26	1.26	1.1	2.48	.69 X 45	1.1			5.8	1
162-6 HEAD	1.26	1.26	1.1	2.48	.69 X 45	1.1			9.6	1
164-2 HEAD	1.14	1.14	.75	2.24	.57 x 45	1.1	—	—	3.5	1
164-5 HEAD	1.14	1.14	.75	2.24	.57 x 45	1.1			6.7	1
165-3 HEAD	.98	.91	.47	1.85	.41 x 45	1.02			4.3	1
165-6 HEAD	.98	.91	.47	1.85	.41 x 45	1.02			6.3	1
262-4 HEAD	1.28	1.28	1.1	2.6	—	—			5.8	2
198-3 HEAD	1.26	1.26	1.61	2.48	.69 x 45	1.1	.55	1.57	6.5	3

MST RITE ANGLE ATTACHMENTS

MODULAR EXTENSIONS

NEW HEAD DESIGN

- AVAILABLE IN 2", 4", AND 6".
- NESTLED BETWEEN SHANK AND HEAD OR NSK ADAPTER
- MULTIPLE EXTENSIONS CAN BE USED FOR ADDITIONAL REACH

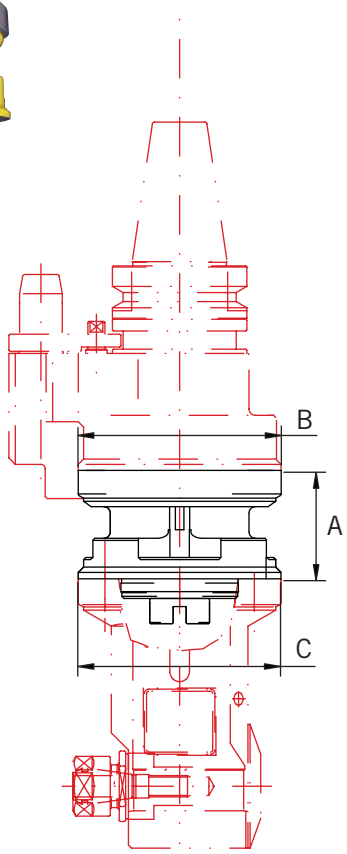

FIG. 1

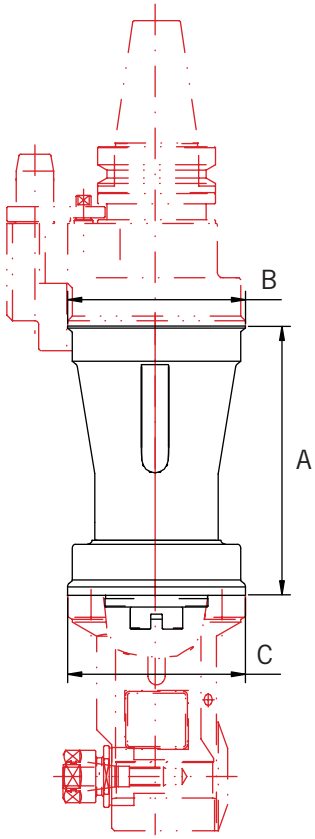

FIG. 2

ORDER NO.	A	B	C	WT (lb.)	FIG.
159-159-2	2	3.74	3.74	3.25	1
159-159-4	4	3.74	3.74	7.3	2
159-159-6	6	3.74	3.74	10.3	2

Note: Multiple Extensions can be stacked together for additional reach.
Note: No coolant thru body feature available for Extensions.

MST RITE ANGLE ATTACHMENTS

MODULAR NSK® ADAPTERS

159-NSK-3

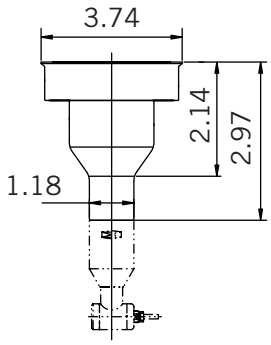

159-NSK-5

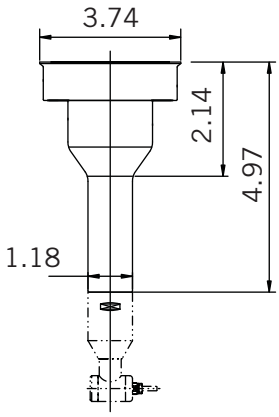

159-NSK-7

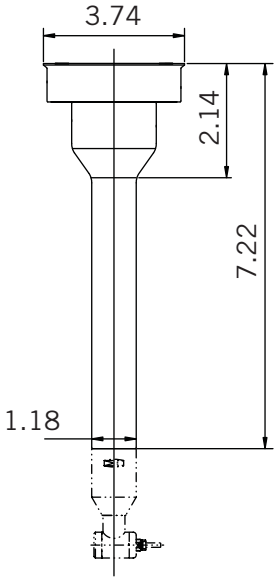

159-NSK-3S

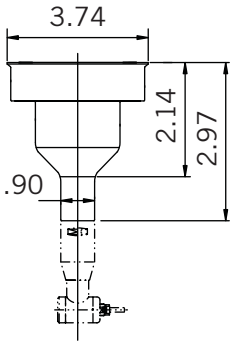

159-NSK-5S

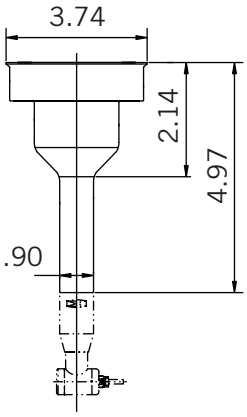

159-NSK-7S

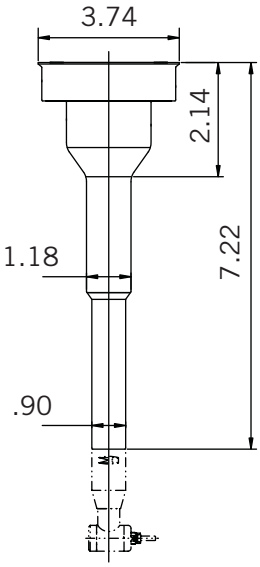

159-NSK-3SS

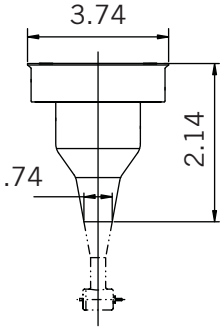

The drawings are shown with optional NSK Mini Angle Attachments.

MST RITE ANGLE ATTACHMENTS

MODULAR NSK® MINI ANGLE HEADS

RA-200 (RA-100)

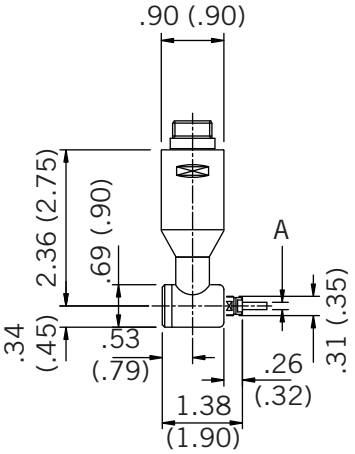

RA-271E

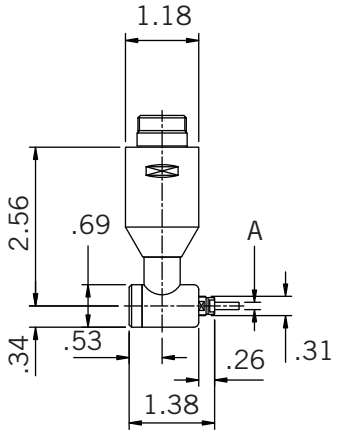

RAX-271E

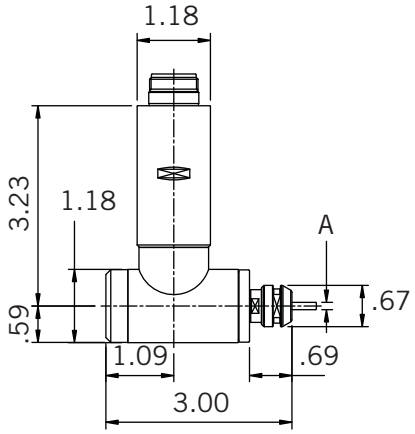

IC-300

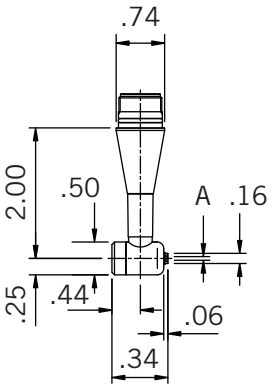

KC-300

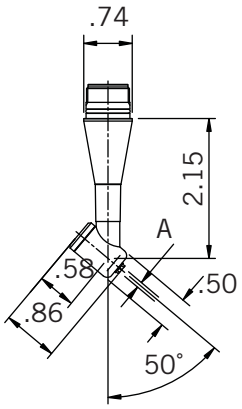

MFC-300M

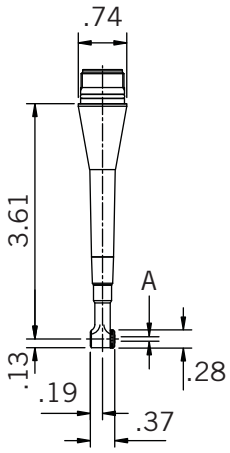

MFC-300S

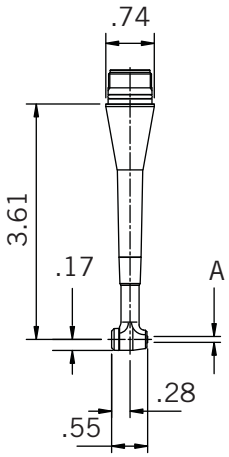

NSK ANGLE HEAD	A MAX	SPEED RED. RATIO	APPLICABLE NSK ADAPTERS
RA-200 (RA-100)	1/8	1/1.5 (1/2.67)	159-NSK-3S, 159-NSK-5S, 159-NSK-7S
RA-271E	1/8	1/1.5	159-NSK-3, 159-NSK-5, 159-NSK-7
RAX-271E	1/4	1/1.5	
IC-300	1/8	3/4	159-NSK-3SS
KC-300	1/8	3/4	
MFC-300M	1.6mm	10/11	
MFC-300S	1.6mm	10/11	

Note: Purchase Shanks (p10), NSK Adapters (p13), Extensions (p12), and Positioning Block (p54) separately.
Note: RA-100, RA-200, RA-271E, RAX-271E, IC-300, & KC-300 are used for light milling & drilling applications only. MFC-300M and MFC-300S are used for light chamfering applications only.
Note: Input Max RPM is 10,000 when used in conjuction with MST Modular Components.

V FLANGE TOOL SHANK

MST RITE ANGLE ATTACHMENTS - MODULAR ASSEMBLY

FIG. 1

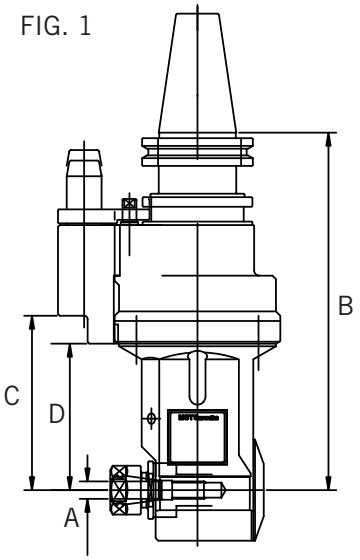

FIG. 2

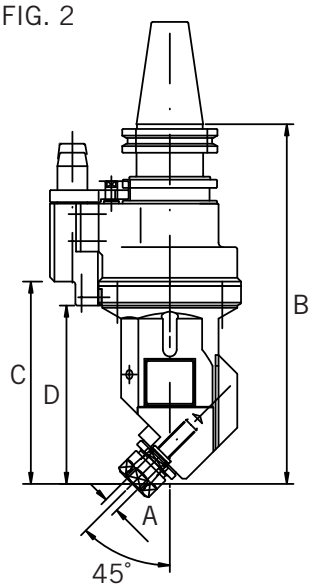

FIG. 3

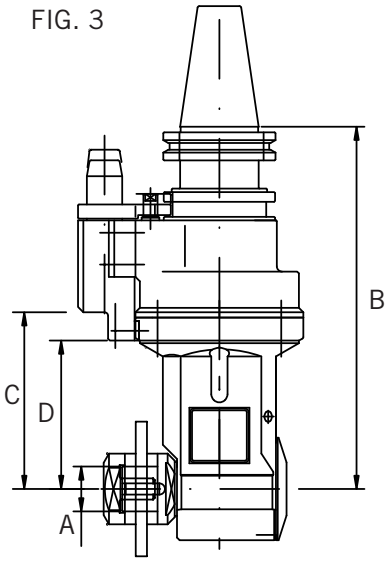

TAPER	ORDER NO.	SHANK	HEAD	RANGE A	COLLET	B	C	D	WT.	FIG.
40	140-159-3	140 Shank	159-3 HEAD	.039–.511	#107 (ER20)	8.07	3.94	3.31	13.8	1
	140-159-6		159-6 HEAD			10.43	6.30	5.67	17.6	
	140-162-3		162-3 HEAD	.039–.393	#103 (ER16)	8.07	3.94	3.31	13.8	
	140-162-6		162-6 HEAD			10.43	6.30	5.67	17.6	
	140-164.2		164-2 HEAD	.019–.275	#102 (ER11)	7.48	3.35	2.72	11.8	
	140-164-5		164-5 HEAD			9.84	5.71	5.08	14.7	
	140-165-3		165-3 HEAD	.019–.196	#101 (ER8)	8.66	4.53	3.90	12.3	
	140-165-6		165-6 HEAD			11.02	6.89	6.26	14.3	
	140-262-4		262-4 HEAD	.039–.393	#103 (ER16)	9.45	5.32	4.69	13.8	2

BUILT-IN STUB ARBOR

TAPER	ORDER NO.	SHANK	HEAD	A	B	C	D	WT	FIG.
140	140-198-3	140 Shank	198-3 HEAD	1.000	8.07	3.94	3.31	14.5	3

Note: Gear Ratio of spindle to angle head is 1:1. Rotating direction of spindle to angle axis is CCW:CW
Note: The maximum RPM is 6,000 with coolant thru body. 5,000 MAX RPM without coolant thru body.
Note: Weight in lb.
Note: See p10 for SHANK specification details
Note: See p11 for HEADS specification details
Note: Purchase positioning block (p54) and collets (p128) separately.

V FLANGE TOOL SHANK

MST RITE ANGLE ATTACHMENTS

MODULAR ASSEMBLY

FIG. 1

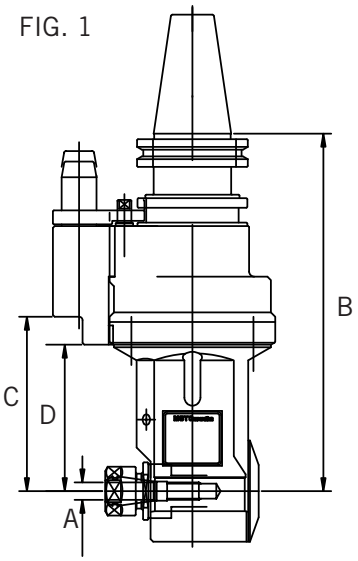

FIG. 2

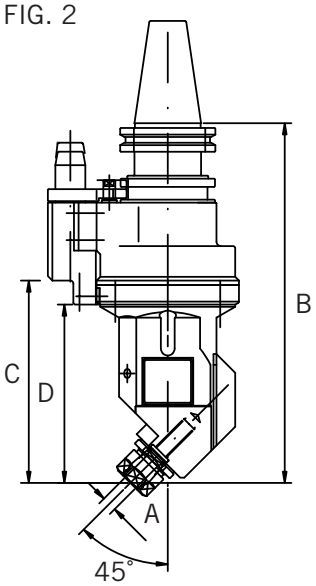

FIG. 3

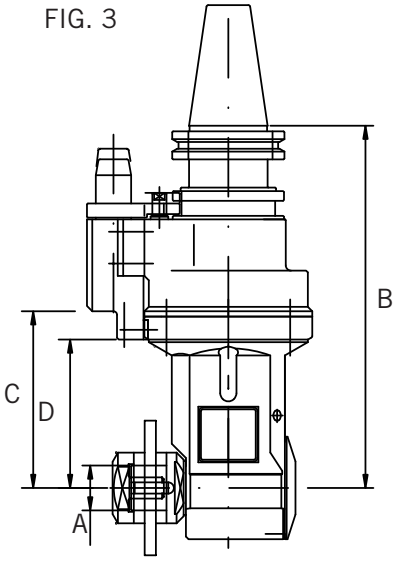

TAPER	ORDER NO.	SHANK	HEAD	RANGE A	COLLET	B	C	D	WT.	FIG.
50	150-159-3	150 Shank	159-3 HEAD	.039–.511	#107 (ER20)	8.07	3.94	3.31	19.8	1
	150-159-6		159-6 HEAD			10.43	6.3	5.67	23.6	
	150-162-3		162-3 HEAD	.039–.393	#103 (ER16)	8.07	3.94	3.31	19.8	
	150-162-6		162-6 HEAD			10.43	6.30	5.67	23.6	
	150-164.2		164-2 HEAD	.019–.275	#102 (ER11)	7.48	3.35	2.72	17.8	
	150-164-5		164-5 HEAD			9.84	5.71	5.08	20.7	
	150-165-3		165-3 HEAD	.019–.196	#101 (ER8)	8.66	4.53	3.90	18.3	
	150-165-6		165-6 HEAD			11.02	6.89	6.26	20.3	
	150-262-4		262-4 HEAD	.039–.393	#103 (ER16)	9.45	5.32	4.69	19.8	2

BUILT-IN STUB ARBOR

TAPER	ORDER NO.	SHANK	HEAD	A	B	C	D	WT	FIG.
150	150-198-3	150 Shank	198-3 HEAD	1.000	8.07	3.94	3.31	21.8	3

Note: Gear Ratio of spindle to angle head is 1:1. Rotating direction of spindle to angle axis is CCW:CW
Note: The maximum RPM is 6,000 with coolant thru body. 5,000 MAX RPM without coolant thru body.
Note: Weight in lb.
Note: See p10 for SHANK specification details
Note: See p11 for HEADS specification details
Note: Purchase positioning block (p54) and collets (p128) separately.

BT FLANGE TOOL SHANK

MST RITE ANGLE ATTACHMENTS

MODULAR ASSEMBLY

FIG. 1

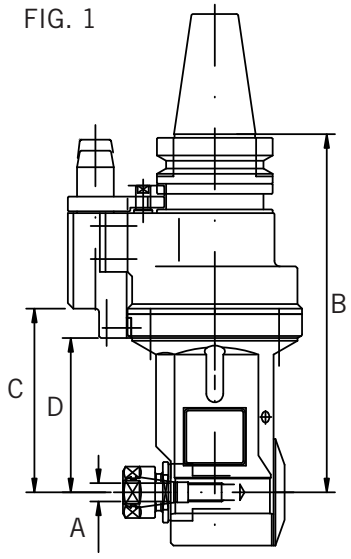

FIG. 2

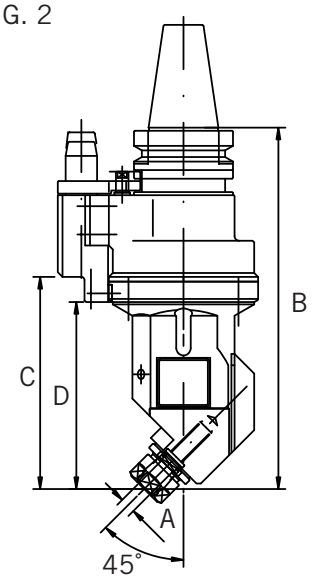

FIG. 3

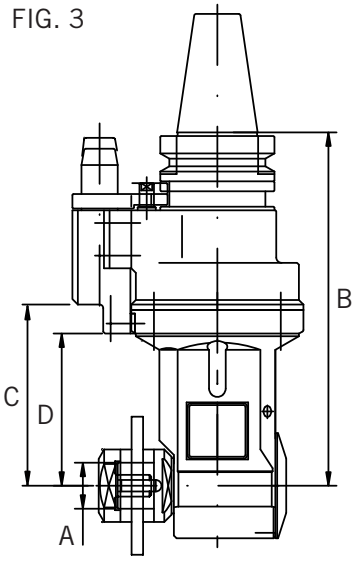

TAPER	ORDER NO.	SHANK	HEAD	RANGE A	COLLET	B	C	D	WT.	FIG.
40	240-159-3	240 Shank	159-3 HEAD	.039-.511	#107 (ER20)	7.68	3.94	3.31	13.6	1
	240-159-6		159-6 HEAD			10.04	6.30	5.67	17.4	
	240-162-3		162-3 HEAD	.039-.393	#103 (ER16)	7.68	3.94	3.31	13.6	
	240-162-6		162-6 HEAD			10.04	6.30	5.67	17.4	
	240-164-2		164-2 HEAD	.019-.275	#102 (ER11)	7.09	3.35	2.72	11.6	
	240-164-5		164-5 HEAD			9.45	5.71	5.08	14.5	
	240-165-3		165-3 HEAD	.019-.196	#101 (ER8)	8.27	4.53	3.90	12.1	
	240-165-6		165-6 HEAD			10.63	6.89	6.26	14.1	
	240-262-4		262-4 HEAD	.039-.393	#103 (ER16)	9.06	5.32	4.69	13.6	2

BUILT-IN STUB ARBOR

TAPER	ORDER NO.	SHANK	HEAD	A	B	C	D	WT	FIG.
240	240-198-3	240 Shank	198-3 HEAD	1.000	7.68	3.94	3.31	14.3	3

Note: Gear Ratio of spindle to angle head is 1:1. The rotating direction of spindle to angle axis is CCW:CW
Note: The maximum RPM is 6,000 with coolant thru body. 5,000 MAX RPM without coolant thru body.
Note: Weight in lb
Note: See p10 for SHANK specification details
Note: See p11 for HEADS specification details
Note: Purchase positioning block (p54) and collets (p128) separately.

HSK FLANGE TOOL SHANK

MST RITE ANGLE ATTACHMENTS

MODULAR ASSEMBLY

FIG. 1

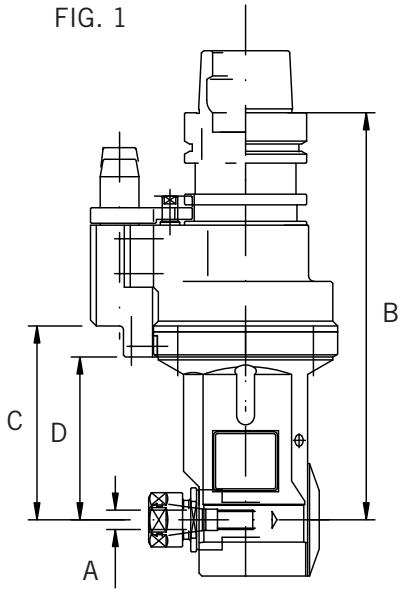

FIG. 2

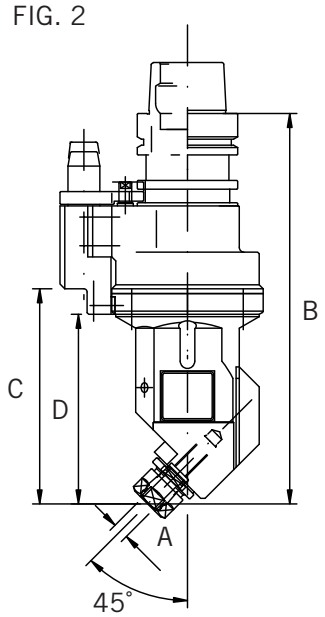

FIG. 3

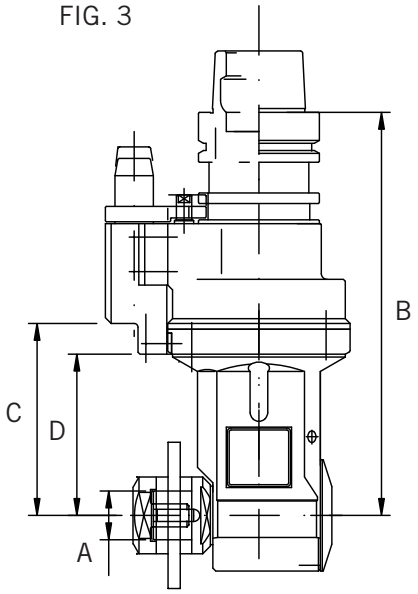

TYPE	ORDER NO.	SHANK	HEAD	RANGE A	COLLET	B	C	D	WT.	FIG.
A63	063-159-3	063 Shank	159-3 HEAD	.039-.511	#107 (ER20)	8.27	3.94	3.31	13.7	1
	063-159-6		159-6 HEAD			10.63	6.30	5.67	17.5	
	063-162-3		162-3 HEAD	.039-.393	#103 (ER16)	8.27	3.94	3.31	13.1	
	063-162-6		162-6 HEAD			10.63	6.30	5.67	17.5	
	063-164.2		164-2 HEAD	.019-.275	#102 (ER11)	7.68	3.35	2.72	11.7	
	063-164-5		164-5 HEAD			10.04	5.71	5.08	14.6	
	063-165-3		165-3 HEAD	.019-.196	#101 (ER8)	8.86	4.53	3.90	12.2	
	063-165-6		165-6 HEAD			11.22	6.89	6.26	14.2	
	063-262-4		262-4 HEAD	.039-.393	#103 (ER16)	9.65	5.32	4.69	13.7	2

BUILT-IN STUB ARBOR

TAPER	ORDER NO.	SHANK	HEAD	A	B	C	D	WT	FIG.
63A	063-198-3	063 Shank	198-3 HEAD	1.000	8.27	3.94	3.31	14.4	3

Note: Gear Ratio of spindle to angle head is 1:1. The rotating direction of spindle to angle axis is CCW:CW
Note: The maximum RPM is 6,000 with coolant thru body. 5,000 MAX RPM without coolant thru body.
Note: Weight in lb.
Note: See p10 for SHANK specification details
Note: See p11 for HEADS specification details
Note: Purchase positioning block (p54) and collets (p128) separately.

HSK FLANGE TOOL SHANK

MST RITE ANGLE ATTACHMENTS

MODULAR ASSEMBLY

FIG. 1

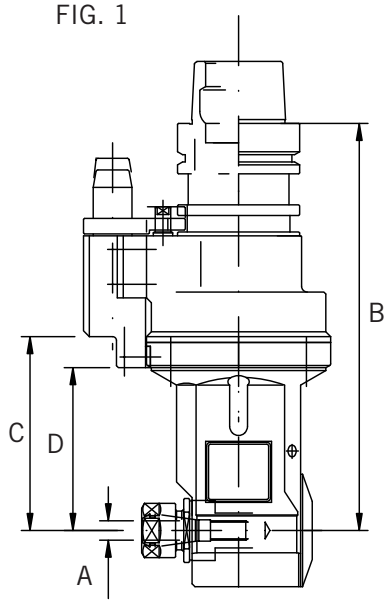

FIG. 2

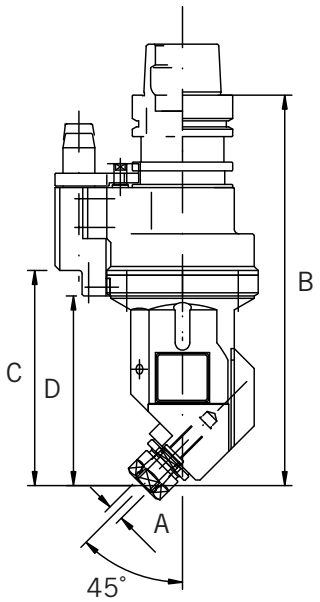

FIG. 3

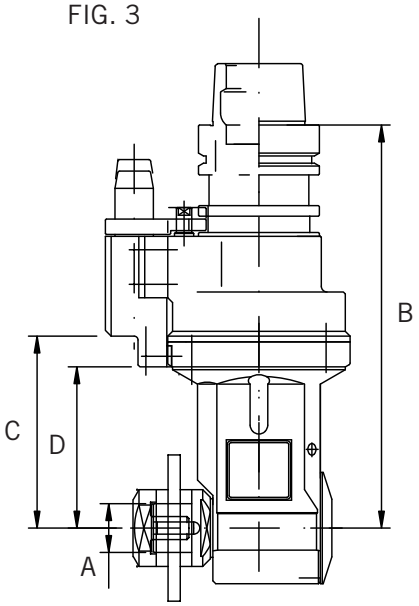

TYPE	ORDER NO.	SHANK	HEAD	RANGE A	COLLET	B	C	D	WT.	FIG.
A100	100-159-3	100 Shank	159-3 HEAD	.039-.511	#107 (ER20)	8.27	3.94	3.31	18.5	1
	100-159-6		159-6 HEAD			10.63	6.30	5.67	22.3	
	100-162-3		162-3 HEAD	.039-.393	#103 (ER16)	8.27	3.94	3.31	17.9	
	100-162-6		162-6 HEAD			10.63	6.30	5.67	22.3	
	100-164-2		164-2 HEAD	.019-.275	#102 (ER11)	7.68	3.35	2.72	16.5	
	100-164-5		164-5 HEAD			10.04	5.71	5.08	19.4	
	100-165-3		165-3 HEAD	.019-.196	#101 (ER8)	8.86	4.53	3.90	17.0	
	100-165-6		165-6 HEAD			11.22	6.89	6.26	19.0	
	100-262-4		262-4 HEAD	.039-.393	#103 (ER16)	9.65	5.32	4.69	18.5	2

BUILT-IN STUB ARBOR

TAPER	ORDER NO.	SHANK	HEAD	A	B	C	D	WT	FIG.
100A	100-198-3	100 Shank	198-3 HEAD	1.000	8.27	3.94	3.31	19.3	3

Note: Gear Ratio of spindle to angle head is 1:1. The rotating direction of spindle to angle axis is CCW:CW
Note: The maximum RPM is 6,000 with coolant thru body. 5,000 MAX RPM without coolant thru body.
Note: Weight in lb
Note: See p10 for SHANK specification details
Note: See p11 for HEADS specification details
Note: Purchase positioning block (p54) and collets (p128) separately.

MST RITE ANGLE ATTACHMENTS

MODULAR NSK® MINIATURE HEAD ASSEMBLY

FIG. 1

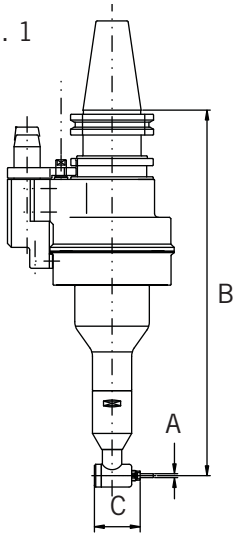

FIG. 2

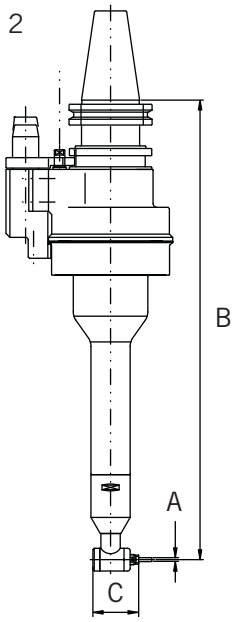

FIG. 3

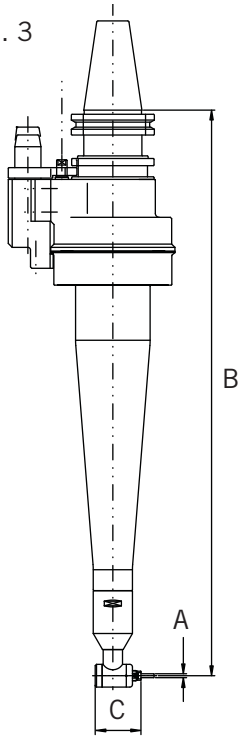

- Mechanically driven, miniature angle heads.
- A better approach to workpiece than ever before

ORDER NO.			A MAX.	B	C	WT.	FIG.
SHANK	NSK ADAPTER	*NSK HEAD					
140 Shank	159-NSK-3	RA-271E	1/8	10.29	1.38	11.2	1
	159-NSK-5			12.29		11.7	2
	159-NSK-7			14.54		14.0	3
	159-NSK-3	RAX-271E	1/4	10.96	3	12.0	1
	159-NSK-5			12.96		12.4	2
	159-NSK-7			15.21		14.7	3
150 Shank	159-NSK-3	RA-271E	1/8	10.29	1.38	16.7	1
	159-NSK-5			12.29		17.2	2
	159-NSK-7			14.54		19.5	3
	159-NSK-3	RAX-271E	1/4	10.96	3	17.4	1
	159-NSK-5			12.96		17.9	2
	159-NSK-7			15.21		20.2	3

Note: The max input/output RPM is 10,000/6,667. The rotating direction of spindle to angle axis is CW:CW.
Note: Purchase NSK Angle Heads through your local NSK America distributor.
Note: See detail specifications on Shanks (p10), NSK Adapters (p13), and NSK Miniature Angle Heads (p14)
Note: 2", 4", and 6" Extensions (p12) are available for longer reach.
Note: NSK Mini Series are for light milling and drilling applications only.
Note: NSK Mini Angle Head Assembly also available in BT40, HSK63A, and HSK100A configurations.

MST RITE ANGLE ATTACHMENTS

MODULAR NSK® MINIATURE HEAD ASSEMBLY

FIG. 1

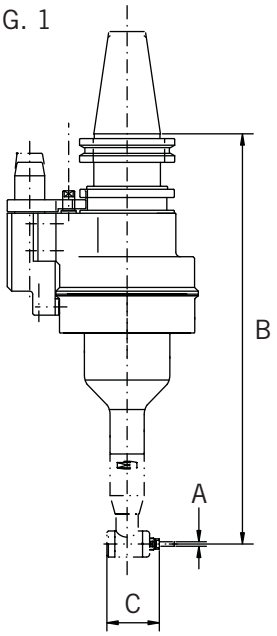

FIG. 2

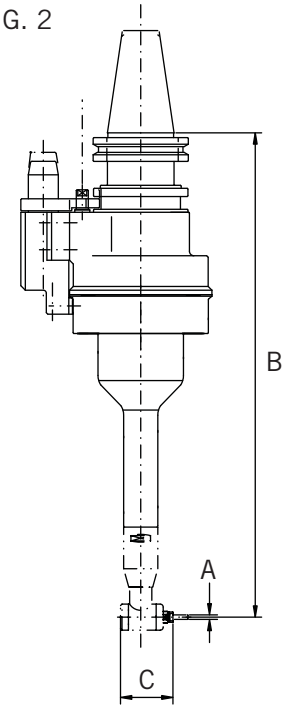

FIG. 3

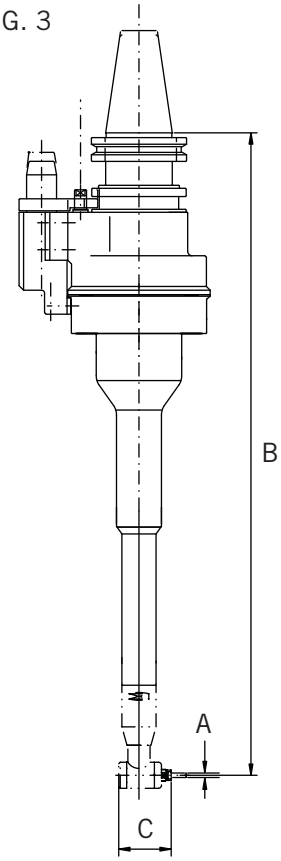

- Mechanically driven, miniature angle heads.
- A better approach to workpiece than ever before

ORDER NO.			A MAX.	B	C	WT.	FIG.
SHANK	NSK ADAPTER	*NSK HEAD					
140 Shank	159-NSK-3S	RA-100 RA-200	1/8	9.58	1.38	11.0	1
	159-NSK-5S			11.58		11.5	2
	159-NSK-7S			13.83		13.8	3
150 Shank	159-NSK-3S	RA-100 RA-200	1/8	9.58	1.38	16.5	1
	159-NSK-5S			11.58		17.0	2
	159-NSK-7S			13.83		19.3	3

Note: The max input/output RPM is 10,000/3,745 for RA-100 and 10,000/6,667 for RA-200.
Note: The rotating direction of spindle to angle axis is CW:CW.
Note: Purchase NSK Angle Heads through your local NSK America distributor.
Note: See detail specifications on Shanks (p10), NSK Adapters (p13), and NSK Miniature Angle Heads (p14).
Note: 2", 4", and 6" Extensions (p12) are available for longer reach.
Note: A set up for RA-100 NSK Mini Angle Attachment is available upon request.
Note: NSK Mini Series are for light milling and drilling applications only.
Note: NSK Mini Angle Head Assembly also available in BT40, HSK63A, and HSK100A configurations.

V FLANGE TOOL SHANK

MST RITE ANGLE ATTACHMENTS

MODULAR NSK® MINIATURE HEAD ASSEMBLY

FIG. 1

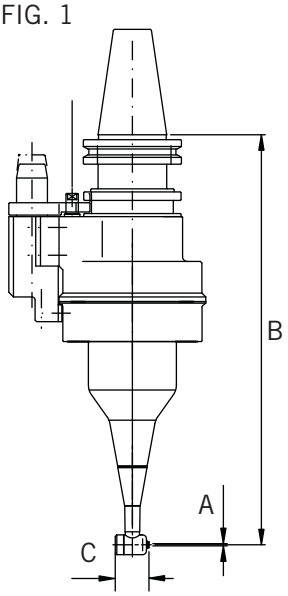

FIG. 2

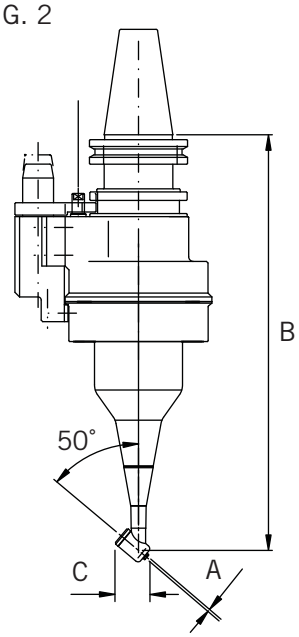

FIG. 3

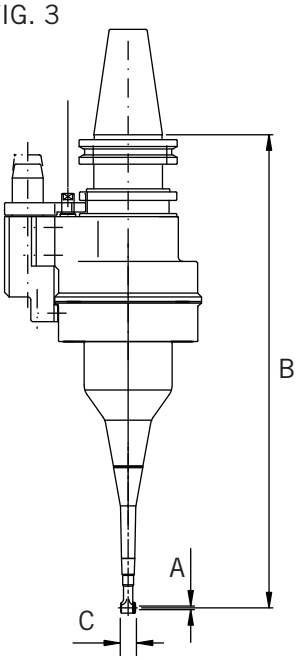

- Mechanically driven, miniature angle heads.
- Accomodates a bore diameter that is small as .79".
- A better approach to workpiece than ever before.

TAPER	ORDER NO.			A MAX.	B	C	MAX RPM INPUT/OUTPUT	FIG.
	SHANK	NSK ADAPTER	*NSK ANGLE HEAD					
40	140 SHANK	NSK-159-3SS	IC-300	1/8	9.22	0.86	10,000/7,500	1
			KC-300		9.37	0.87	10,000/7,500	2
			MFC-300M	1.6 mm	10.83	0.37	10,000/9,090	3
			MFC-300S		10.83	0.55	10,000/9,090	
50	150 SHANK	NSK-159-3SS	IC-300	1/8	9.22	0.86	10,000/7,500	1
			KC-300		9.37	0.87	10,000/7,500	2
			MFC-300M	1.6 mm	10.83	0.37	10,000/9,090	3
			MFC-300S		10.83	0.55	10,000/9,090	

Note: The weight is 10.7 lb. for 40 taper and 16.2 lb. for 50 taper.
Note: The rotating direction of spindle to angle axis is CW:CW.
Note: Purchase NSK Angle Heads through your local NSK America distributor.
Note: See detail specifications on Shanks (p10), NSK Adapters (p13), and NSK Miniature Angle Heads (p14)
Note: IC-300 & KC-300 are used for light milling & drilling applications only.
Note: MFC-300M & MFC-300S are used for light chamfering application only.
Note: 2", 4", and 6" Extensions (p12) are available for longer reach.
Note: NSK Mini Angle Head Assembly also available in BT40, HSK63A, and HSK100A configurations.

MST RITE ANGLE ATTACHMENTS

FIXED TYPE

Patented

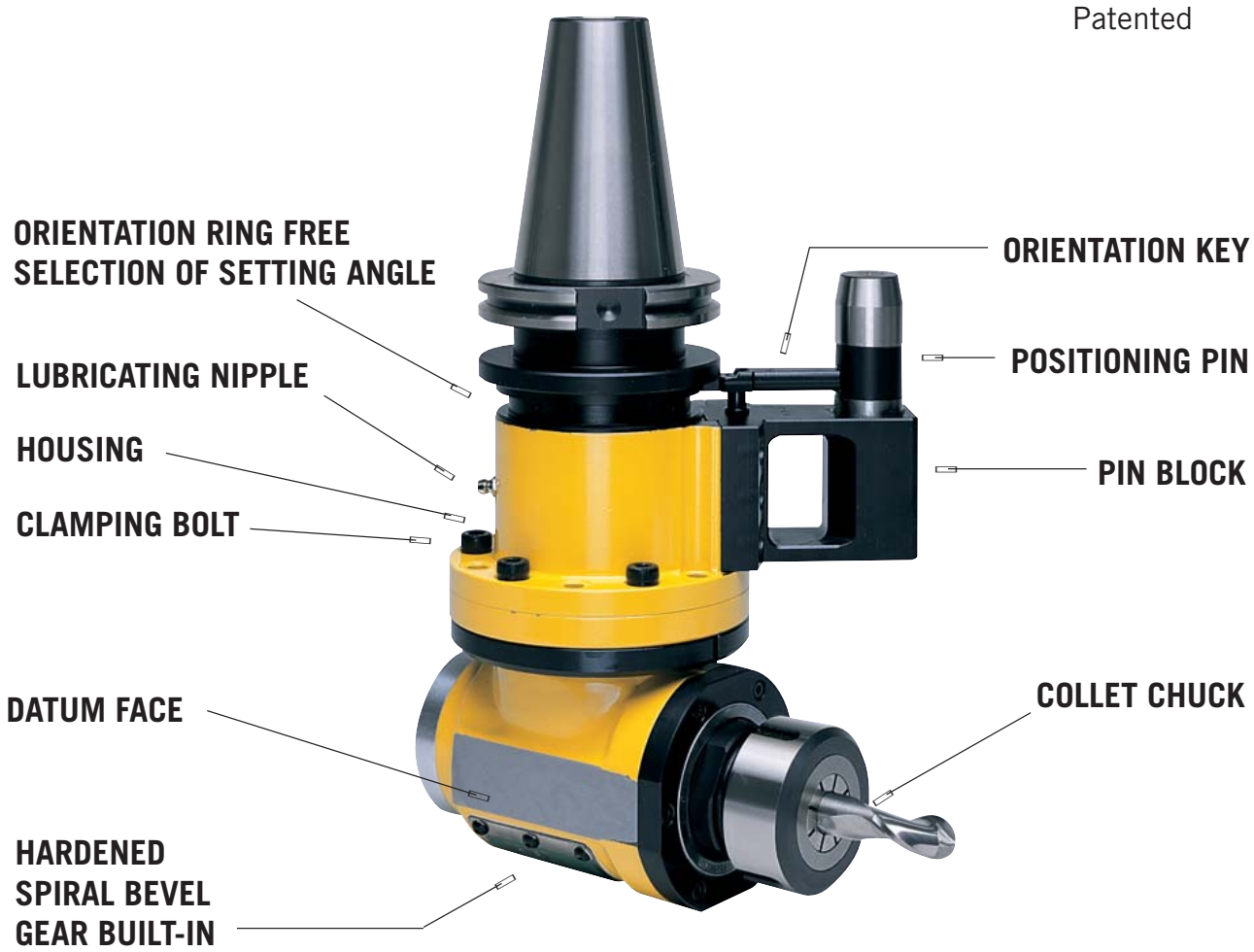

- COMPACT ANGLE HEAD DESIGN AND RUGGED BODY CONSTRUCTION FOR HEAVY DUTY CUTTING
- INTERCHANGEABLE AMONG MACHINES WITH SAME TAPER AND FLANGE BY CHANGING POSITIONING ACCESSORIES
- HARDENED PRECISION GEAR MECHANISM IMMERSED IN MOLYBDENUM GREASE FOR MANY HOURS OF MAINTENANCE FREE OPERATION
- ACCEPTS INDUSTRIAL STANDARD COLLETS
- GUARANTEED ACCURACY — .0002" T.I.R. AT THE CAVITY
- CUTTING DIRECTION ANYWHERE FROM 0° TO 360°

MST RITE ANGLE ATTACHMENTS

FIXED TYPE

SYSTEM CHART

Code No. of Angle Head
Collet Range

FIXED TYPE

(Not Interchangeable)

Taper

#40

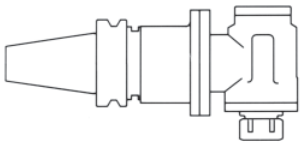

161 - L
.039 - .787

#45

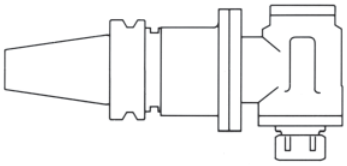

160 - L
.093 - 1.000

#50

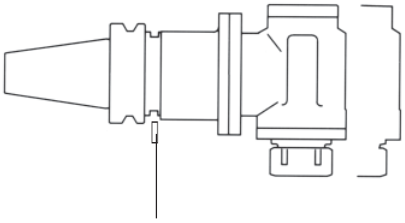

160 - L
.093 - 1.000

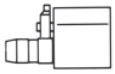

Custom Fit Pin Block
Note: L means projection length (variety of length available)

Example of Order No.

140 - 161 - 8

- 8 — Approx. Projection Length 8"
- 161 — Angle Head and Collet Range (.039-.787")
- 140 — V Flange Tool Shank #40 Taper

DIMENSION ON ANGLE HEADS

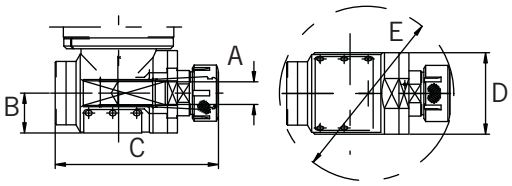

MODEL	COLLET	RANGE A	B	C	D	E
160	#100 (TG100)	.093-1.000	1.73	7.09	3.54	7.6
161	#109 (ER32)	.039-.787	1.57	6.30	3.46	6.7

GUARANTEED ACCURACIES

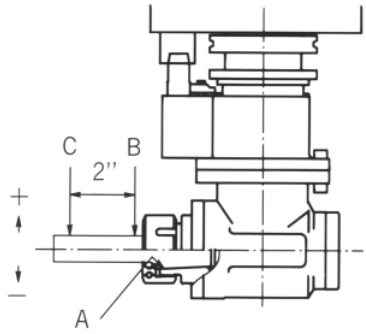

Cavity at Bore	A	.0002" TIR
Test Bar at Face	B	.0004" TIR
Test Bar at 2"	C	.0006" TIR
Deviation of Angle (high or low of C under B = 0)	90°	±.0004" TIR

V FLANGE TOOL SHANK

MST RITE ANGLE ATTACHMENTS

FIXED TYPE

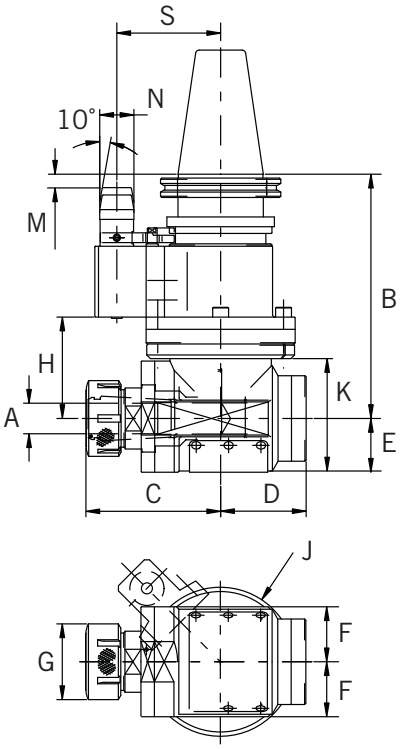

MODEL	GEAR RATIO Spindle : Angle Head		
140-161-7	1	:	0.81
150-160-8	1	:	0.96
150-160-10	1	:	0.96

Note: Rotating direction
Spindle: Angle Axis = CCW: CW

TAPER	ORDER NO.	RANGE A	B	C	D	E	F	G	H	J	K	M	N	S*	WT lb.
40	140-161-7	.039–.787	6.89	3.74	2.56	1.57	1.73	1.97	2.48	3.86	3.35	0	.79	2.56	16.6
50	150-160-8	.093–1.000	7.87	4.33	2.76	1.73	1.77	2.50	3.27	4.80	3.62	.12	1.1	4.33	29.8
	150-160-10		10.00						5.39						33.5

Note: Purchase positioning block (p54) separately.
Note: Collets are #109 (ER32) for 140-161-7 (p129) and #100 (TG100) for 150-160-8 and -10 (p137).
Note: MAX INPUT R.P.M IS 3,000 for 140-161-7 and 2,500 for 150-160-8 and -10.
Note: * means other optional S dimensions available: 2.36 for 140 model and 3.15 & 3.35 for 150 models.

CUTTING DATA

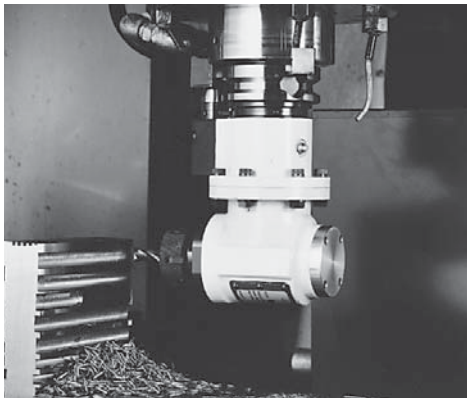

MODEL : 150-160-8

WORKPIECE	SIZE OF END MILL	DEPTH OF CUT	R.P.M.	FEED*	FINISH
Aluminum	.630 Dia.	.280	1800	5.12	Good
Cast Iron	2 Flute	.200	630	3.15	Good
Steel	H.S.S.	.200	630	3.15	Good
Stainless	End Mill	.120	630	1.57	Good

Note: * means inch per minute.

BT FLANGE TOOL SHANK

MST RITE ANGLE ATTACHMENTS

FIXED TYPE

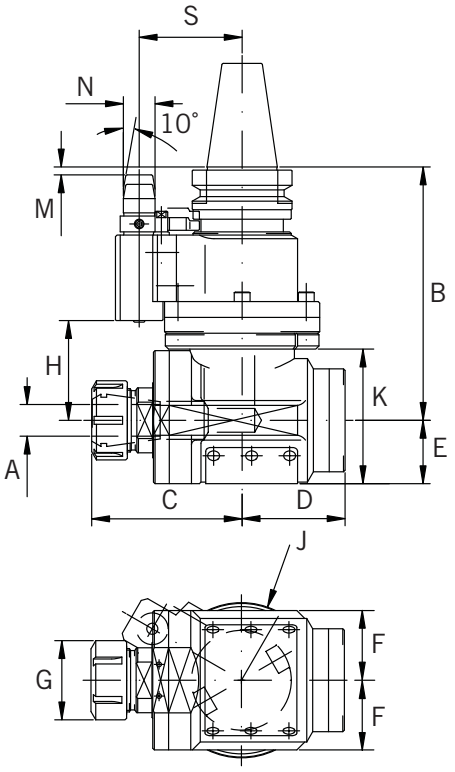

MODEL	GEAR RATIO Spindle : Angle Head
240-161-6	1 : 0.81

Note: Rotating direction
Spindle: Angle Axis = CCW: CW

TAPER	ORDER NO.	RANGE A	B	C	D	E	F	G	H	J	K	M	N	S*	MAX R.P.M.
40	240-161-6	.039–.787	6.30	3.74	2.56	1.57	1.73	1.97	2.48	3.89	3.35	0	.79	2.56	3000

Note: Rite Angle Head weighs 16.1 lb.
Note: Purchase positioning block (p54) and collets (p129) separately.
Note: Collet is #109 (ER32).
Note: * means other optional S dimension available: 2.36.

V FLANGE TOOL SHANK

MST RITE ANGLE ATTACHMENTS - MASTER HOLDER TYPE

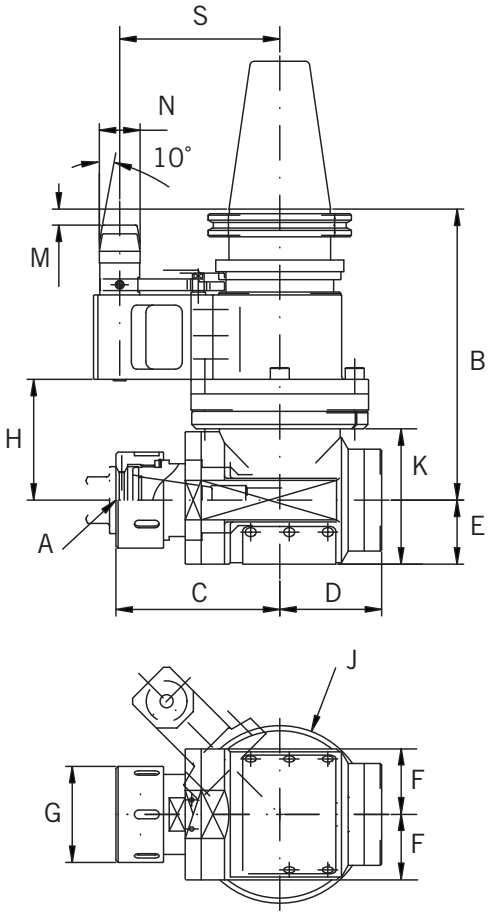

- **Quick change master holder with BT30 taper cavity built-in.**
- **Fast, 3 seconds tool change for facing, milling, drilling, boring, etc.**
- **Adapters are locked-in securely by cam action locking nut.**
- **Precision ground gears concealed in molybdenum grease and maintenance free for many hours operation.**

TAPER	ORDER NO.	SPINDLE A	CAVITY OF MASTER HOLDER	GEAR RATIO
50	150-163-8	BT30 Shank	NT #30	1 : 0.96

RITE-ANGLE ATTACHMENT	B	C	D	E	F	G**	H**	J	K	M	N	S*	MAX R.P.M.
150-163-8	7.87	4.33	2.76	1.73	1.77	2.60	3.27	4.80	3.66	.12	1.10	4.33	2500

Note: The weight is 32.5 lb. and does not including the adapter.
Note: ** means specification provided as a standard.
Note: Purchase positioning block (p54) and BT30 adapters separately.
Note: * means other optional S dimensions available: 3.15 and 3.35.

MST RITE ANGLE ATTACHMENTS

FLANGE TYPE

Patented

- BOLTED DIRECTLY ON THE SPINDLE FACE FOR MAXIMUM RIGIDITY
- COMPACT HEAD DESIGN AND RUGGED BODY CONSTRUCTION
- INTERCHANGEABLE AMONG SAME TAPER MACHINES BY CHANGING THE MOUNTING PLATE
- HARDENED PRECISION SPIRAL BEVEL GEAR IMMERSED IN THE MOLYBDENUM GREASE
- AVAILABLE IN VARIOUS ANGLE SHAFT CONFIGURATIONS: #100 (TG100) COLLET TYPE, BT30 QUICK-CHANGE MASTER HOLDER TYPE, NT#40 MASTER HOLDER TYPE, AND MODULAR HEAD TYPE
- AVAILABLE IN PARALLEL AND MODULAR DESIGNS
- GUARANTEED ACCURACY — .0002" T.I.R. AT THE CAVITY
- CUTTING DIRECTION ANYWHERE FROM 0° TO 360°

MST RITE ANGLE ATTACHMENTS

FLANGE TYPE

SYSTEM CHART

Flange	Mounting Plate	Shank Code No./Taper
	F-160	340 / #40
	F-190	350 / #50

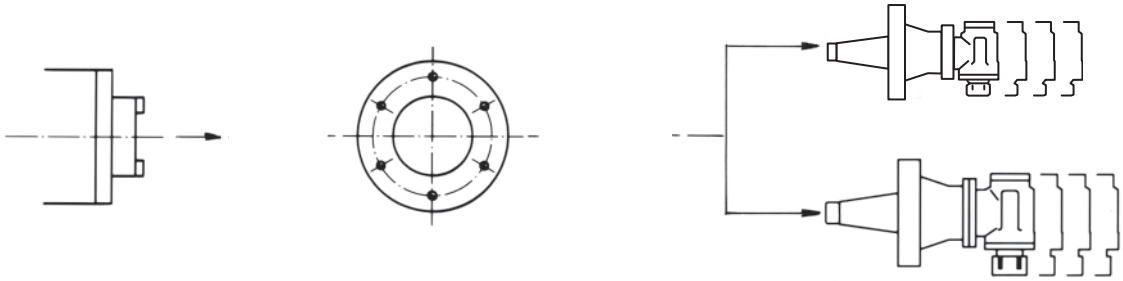

(Not Interchangeable)

GUARANTEED ACCURACIES

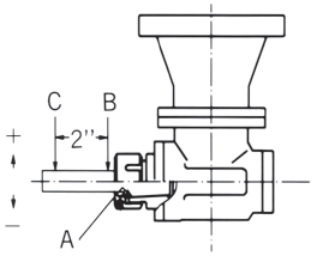

Cavity at Bore	A	.0002" TIR
Test Bar at Face	B	.0004" TIR
Test Bar at 2"	C	.0006" TIR
Deviation of Angle (high or low of C under B = 0)	90°	±.0004" TIR

GEAR RATIO

MODEL	GEAR RATIO SPINDLE	:	ANGLE HEAD
160	1	:	0.96
163	1	:	0.96
166	1	:	0.9

CUTTING DATA

WORKPIECE	SIZE OF END MILL	DEPTH OF CUT	R.P.M.	FEED*	FINISH
Steel	.630 Dia. 2 Flute H.S.S. End Mill	.394	600	1.97	Good
Steel	.944 Dia. 2 Flute H.S.S. End Mill	.394	355	1.97	Good
Stainless Steel		.315	355	1.97	Good

Note: * means inch per minute.

MST RITE ANGLE ATTACHMENTS

FLANGE TYPE

SPECIFICATION

FIG. 1

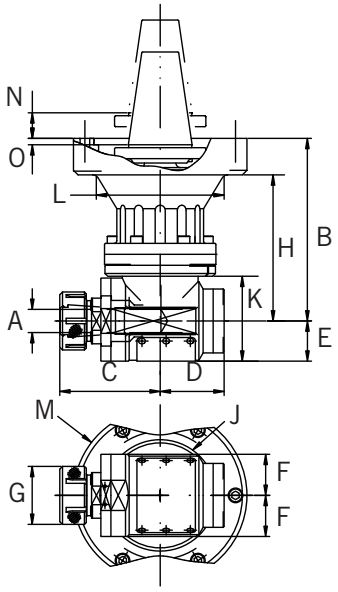

FIG. 2

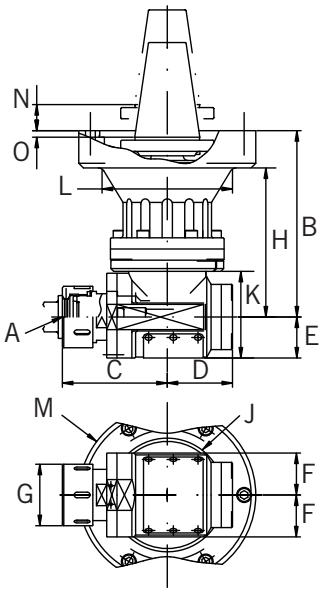

TAPER	ORDER NO.	RANGE A	B	C	D	E	F	G
50	350-160-8	#100 (TG100) .093–1.000	7.87	4.33	2.76	1.73	1.77	2.50
	350-160-14		13.78					
	350-163-8	BT Master Holder	7.87	4.43	2.76	1.73	1.77	2.60
	350-163-14		13.78					

TAPER	ORDER NO.	H	J	K	L	M	N	O	WT (LB.)	FIG.
50	350-160-8	6.30	4.80	3.7	5.51	7.48	1.10	.28	40.7	1
	350-160-14	12.20							62.9	
	350-163-8	6.30							43.3	2
	350-163-14	12.20							65.6	

Note: Furnished with mounting plate (p54)
Note: Purchase collets (p137) and BT30 adapters separately.
Note: When ordering, specify CAT50 or NMTB50 shank.
Note: Maximum machine spindle RPM is 2,500.

MST RITE ANGLE ATTACHMENTS

FLANGE TYPE

MASTER HOLDER TYPE WITH NT#40 BUILT-IN TAPER

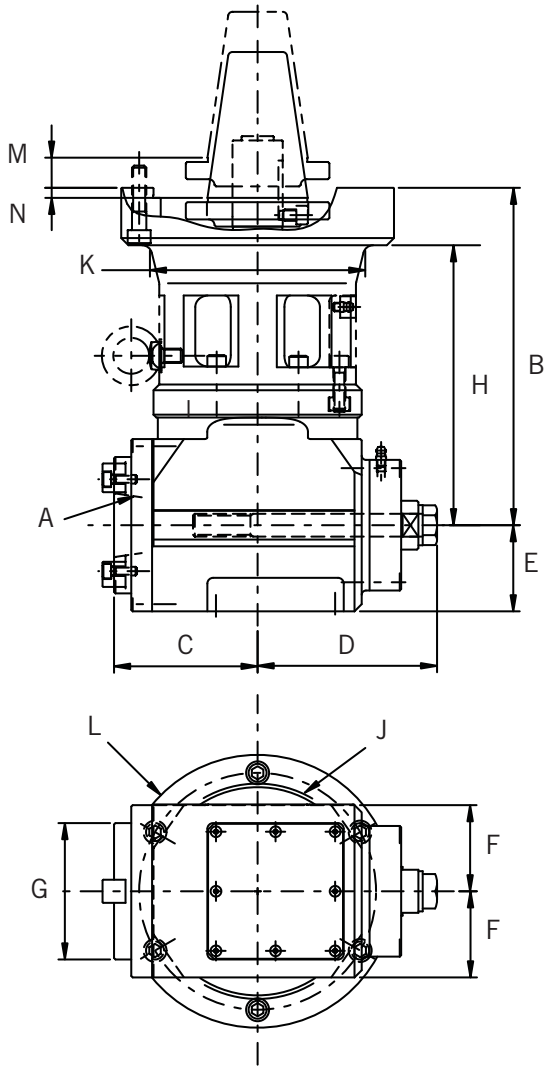

TAPER	ORDER NO.	A*	B	C	D	E	F	G	H	J	K	L	M	N
50	350-166-9	CT40 Master Holder Type	9.25	3.94	4.92	2.36	2.36	3.74	7.68	5.91	5.90	7.48	.83	.28

Note: Furnished with mounting plate (p54). Purchase CAT40 adapters separately.
Note: The unit weighs 73 lb.
Note: When ordering specify CAT50 or NMTB50 shank.
Note: The maximum machine spindle RPM is 2,200.
Note: The metric draw bolt and drive keys for 240 (BT40) shank are available upon request.

MST RITE ANGLE ATTACHMENTS

FLANGE TYPE

FLANGE SHANKS FOR MODULAR HEADS

ANGLE TYPE

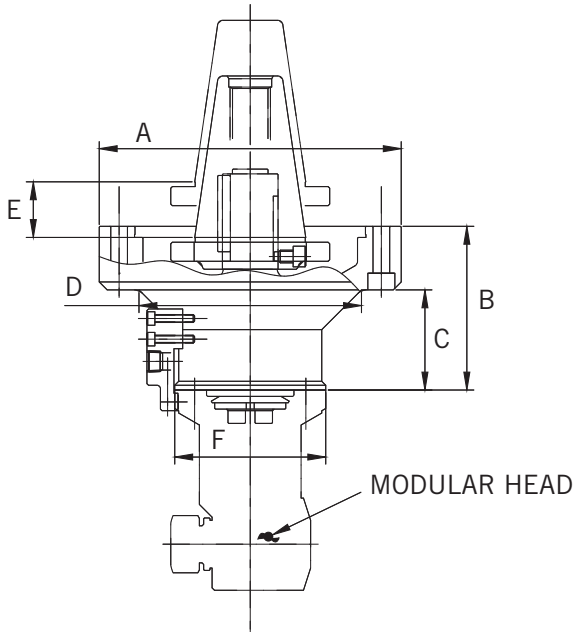

FIG. 1

PARALLEL TYPE

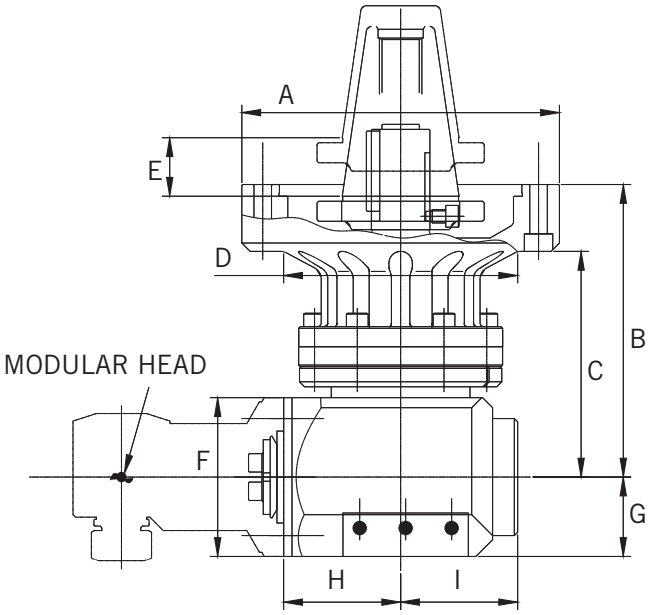

FIG. 2

TAPER	ORDER NO.	A	B	C	D	E	F	FIG.
40	340 SHANK	6.30	3.86	2.68	4.33	1.18	3.74	1
50	350 SHANK	8.66	4.06	2.48	5.51	1.38	3.74	1

TAPER	ORDER NO.	A	B	C	D	E	F	G	H	I	FIG.
40	340 PARALLEL SHANK	6.30	6.89	5.71	4.33	1.18	3.74	1.87	2.76	2.76	2
50	350 PARALLEL SHANK	8.66	6.89	5.31	5.51	1.38	3.74	1.87	2.76	2.76	2

MST RITE ANGLE ATTACHMENTS HALF SERIES

FOR DRILLING, TAPPING, REAMING, & LIGHT MILLING APPLICATIONS

- COMPACT AND LIGHT WEIGHT ANGLE HEAD DESIGN FOR DRILLING TAPPING, REAMING, AND LIGHT MILLING APPLICATIONS
- CAST IRON HOUSING FOR MAXIMUM RIGIDITY
- EASY MAINTENANCE
- ACCEPTS ULTRA PRECISION DETa-1 OR CTA COLLETS
- CUTTING DIRECTION ANY WHERE FROM 0° TO 360°
- AVAILABLE IN CAT40, CAT50, BT30, BT40, AND HSK63A FLANGE CONFIGURATIONS
- ALSO AVAILABLE IN COOLANT-THRU

MST RITE ANGLE ATTACHMENTS

HALF SERIES

FOR DRILLING, TAPPING, AND REAMING APPLICATIONS

152 AND 154 SERIES
for drilling, reaming, and light milling applications.

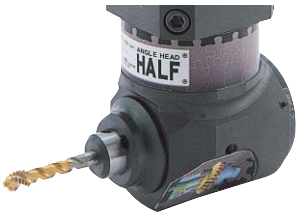

153 AND 155 SERIES
for tapping applications.

CUTTING DATA

FIG. 1

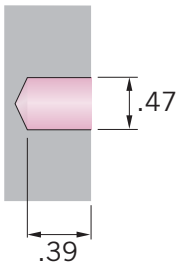

FIG. 2

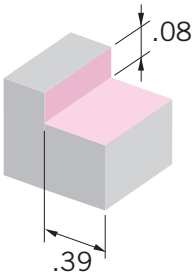

FIG. 3

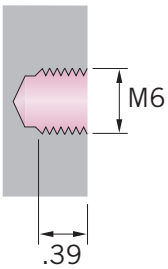

FIG. 4

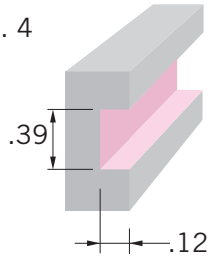

	DRILLING	SIDE CUTTING	TAPPING	GROOVING BY END MILL
CUTTER	Ø.47-Drill	Ø.39-End Mill	M6-Tapping	Ø.39-End Mill
WORK MATERIAL	S55C	S55C	S50C	S55C
CUTTING SPEED	83 ft/min	36ft/min	12.4ft/min	36ft/min
FEED RATE	3.2in/min	2.0in/min	7.9in/min	2.0in/min
SPINDLE SPEED	670 rpm	350 rpm	200 rpm	350 rpm
FIG. NO.	1	2	3	4

MST RITE ANGLE ATTACHMENTS
HALF SERIES - LIGHT DUTY, COMPACT TYPE

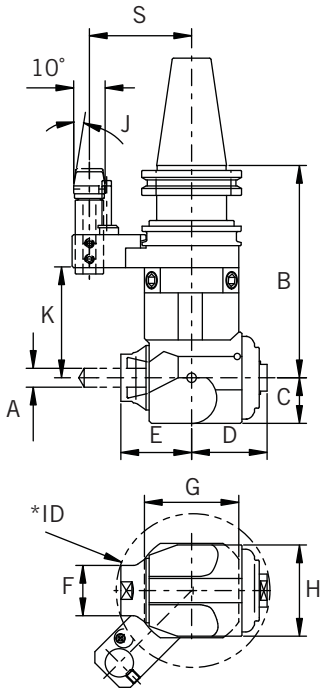

FIG. 1

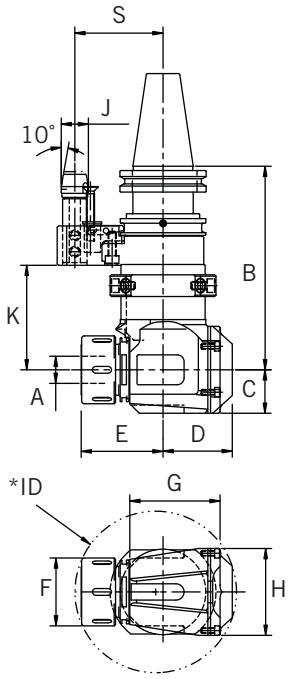

FIG. 2

GEAR RATIO (Spindle: Angle Head)
1:1 for 152 & 154 Models
1 : 0.83 for 156 Model

ROTATION DIRECTION
Spindle: Angle Head = CCW:CW

MAX RPM
6,000 RPM for 152 Model
4,000 RPM for 154 Model
5,000 RPM for 156 Model

***SMALLEST ID FOR THE HEAD TO FIT INTO**
2.68 for 152 Model
3.66 for 154 Model
4.69 for 156 Model

V FLANGE TOOL SHANK FOR DRILLING APPLICATION

TAPER	ORDER NO	RANGE A	COLLET	B	C	D	E	F	G	H	J	K	S**	WT.	FIG.
40	140-152-5	.039–.276	#070	5.31	.75	1.42	1.26	1.10	2.20	1.50	.79	2.76	2.56	6.8	1
	140-152-8			7.68								5.12		7.5	
	140-154-5	.098–.512	#120	5.31	1.14	1.89	1.77	1.26	2.36	2.28		2.76		8.2	
	140-154-8			7.68								5.12		11.0	
	140-156-6	.250–.750	#116	5.91	1.26	2.01	2.36	1.97	2.62	2.52		3.03		10.4	2
	140-156-8			8.27								5.39		12.8	2
50	150-152-8	.039–.276	#070	7.68	.75	1.42	1.26	1.10	2.20	1.50	1.10	5.12	4.33	13.0	1
	150-152-10			10.04								7.48		13.8	
	150-154-5	.098–.512	#120	5.31	1.14	1.89	1.77	1.26	2.36	2.28		2.76		12.8	
	150-154-8			7.68								5.12		15.7	
	150-154-10			10.04								7.48		18.5	
	150-156-6	.250–.750	#116	5.91	1.26	2.01	2.36	1.97	2.62	2.52		3.03		15.0	2
	150-156-8			8.27								5.39		17.6	
	150-156-11			10.63								7.76		20.0	

Note: Standard accessories are: 1 each of Angle Axis Spanner Wrench, Hex Wrench, and Orientation Ring Hex Wrench.
Note: Purchase #070 & #120 collets (p92), #116 collets (p90), and positioning block (p54) separately.
Note: Weight in lb.
Note: Furnished with tapered positioning pin.
Note: ** means S dimension of 2.36 is also available for 40 taper models and 3.15 & 3.35 for 50 taper models.

MST RITE ANGLE ATTACHMENTS
HALF SERIES - LIGHT DUTY, COMPACT TYPE

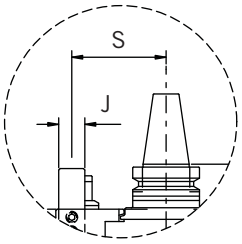

This diagram shows BT30 taper shank configuration

FIG. 1

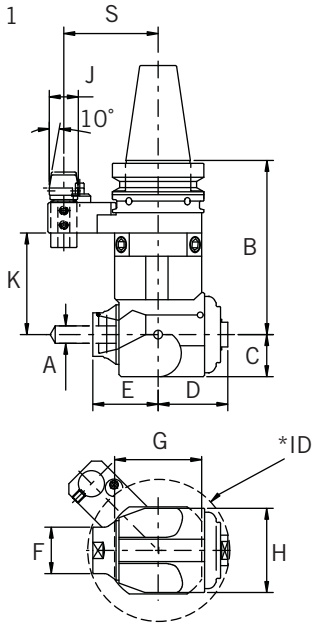

FIG. 2

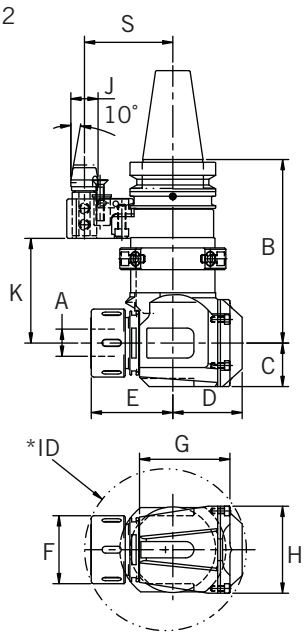

GEAR RATIO (Spindle: Angle Head)
1:1 for 152 & 154 Models
1 : 0.83 for 156 Model

ROTATION DIRECTION
Spindle: Angle Head = CCW:CW

MAX RPM
6,000 RPM for 152 Model
4,000 RPM for 154 Model
5,000 RPM for 156 Model

***SMALLEST ID FOR THE HEAD TO FIT INTO**
2.68" for 152 Model
3.66" for 154 Model
4.69" for 156 Model

BT FLANGE TOOL SHANK FOR DRILLING APPLICATION

TAPER	ORDER NO	RANGE A	COLLET	B	C	D	E	F	G	H	J	K	S**	WT.	FIG.
30	230-152-5	.039–.276	#070	4.80	.75	1.42	1.26	1.10	1.65	1.50	.71	2.76	2.56	5.1	1
	230-152-7			7.17								5.12		6.6	
	230-154-5	.098–.512	#120	4.80	1.14	1.89	1.77	1.26	2.36	2.28		2.76		6.4	
40	240-152-5	.039–.276	#070	4.72	.75	1.42	1.26	1.10	1.65	1.50	.79	2.76		6.6	1
	240-152-7			7.09								5.12		7.3	
	240-154-5	.098–.512	#120	4.72	1.14	1.89	1.77	1.26	2.36	2.28		2.76		7.9	
	240-154-7			7.09								5.12		10.8	
	240-156-5	.250–.750	#116	5.31	1.26	2.01	2.36	1.97	2.62	2.52		3.03		9.9	2
	240-156-8			7.68								5.39		12.3	2

Note: Standard accessories are: 1 each of Angle Axis Spanner Wrench, Hex Wrench, and Orientation Ring Hex Wrench.
Note: Purchase #070 & #120 collets (p92), #116 collets (p90), and positioning block (p54) separately.
Note: Weight in lb.
Note: Furnished with tapered positioning pin for 40 taper and with straight positioning pin for 30 taper models.
Note: ** means S dimension of 2.36 is also available for 40 taper models.

MST RITE ANGLE ATTACHMENTS
HALF SERIES - LIGHT DUTY, COMPACT TYPE

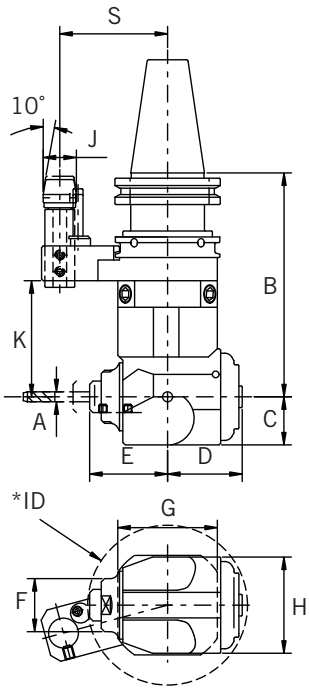

FIG. 1

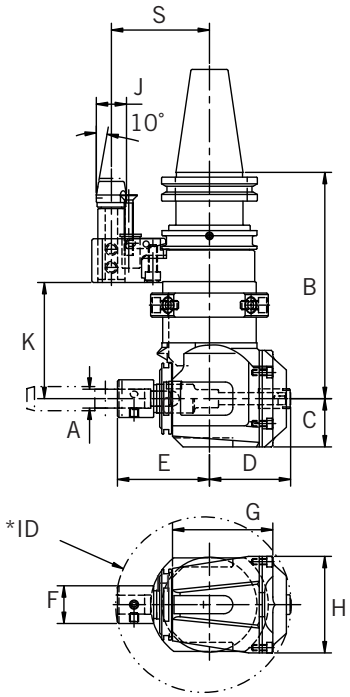

FIG. 2

GEAR RATIO (Spindle: Angle Head)
1:1 for 153 & 155 Models
1 : 0.83 for 157 Model

ROTATION DIRECTION
Spindle: Angle Head = CCW:CW

***SMALLEST ID FOR THE HEAD TO FIT INTO**
2.87" for 153 Model
3.62" for 155 Model
4.57" for 157 Model

V FLANGE TOOL SHANK FOR TAPPING APPLICATION

TAPER	ORDER NO	RANGE A	COLLET	B	C	D	E	F	G	H	J	K	S*	WT.	FIG.
40	140-153-5	#4 - 1/4 HAND TAP	#153	5.31	.75	1.38	1.50	1.30	2.20	1.50	.79	2.76	2.56	6.8	1
	140-153-8			7.68								5.12		7.5	
	140-155-5	#4 - 1/2 HAND TAP	#155	5.31	1.14	1.77	1.85	1.18	2.36	2.28		2.76		8.2	
	140-155-8			7.68								5.12		11.0	
	140-157-6	#4 - 5/8 HAND TAP	#157	5.91	1.26	2.13	2.4	.98	2.62	2.52		3.03		10.4	2
	140-157-8			8.27								5.39		12.8	2
50	150-153-8	#4 - 1/4 HAND TAP	#153	7.68	.75	1.38	1.50	1.30	1.65	1.50	1.10	5.12	4.33	13.0	1
	150-153-10			10.04								7.48		13.8	
	150-155-5	#4 - 1/2 HAND TAP	#155	5.31	1.14	177	1.85	1.18	2.36	2.28		2.76		12.8	
	150-155-8			7.68								5.12		15.7	
	150-155-10			10.04								7.48		18.5	
	150-157-6	#4 - 5/8 HAND TAP	#157	5.91	1.26	2.13	2.40	.98	2.62	2.52		3.03		15.0	2
	150-157-8			8.27								5.39		17.6	
	150-157-11			10.63								7.76		20.0	

Note: Standard accessories are: 1 each of Angle Axis Spanner Wrench, Hex Wrench, and Orientation Ring Hex Wrench.
Note: Purchase tap sleeves (p53) and positioning block (p54) separately.
Note: Furnished with tapered positioning pin.
Note: The weight is in lb.
Note: ** means S dimension of 2.36 is also available for 40 taper models and 3.15 & 3.35 for 50 taper models.

MST RITE ANGLE ATTACHMENTS
HALF SERIES - LIGHT DUTY, COMPACT TYPE

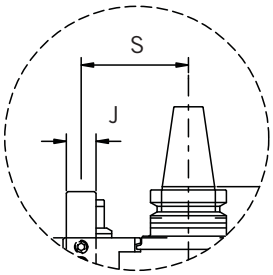

This diagram shows BT30 taper shank configuration

FIG. 1

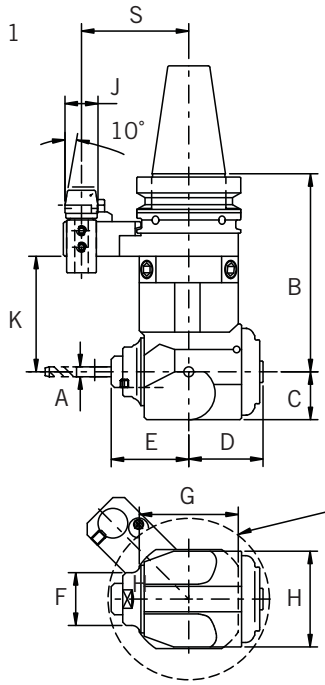

FIG. 2

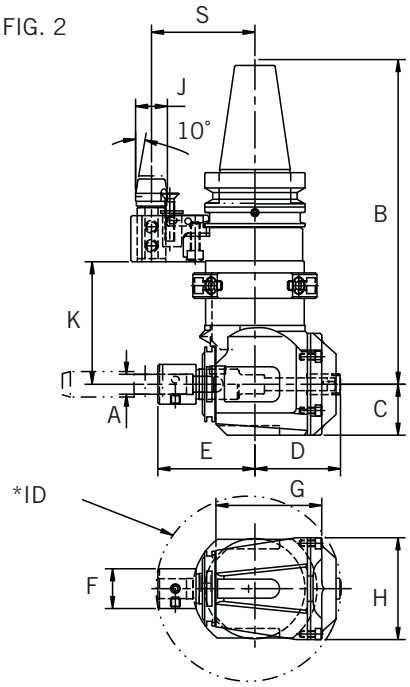

GEAR RATIO (Spindle: Angle Head)
1:1 for 153 & 155 Models
1 : 0.83 for 157 Model

ROTATION DIRECTION
Spindle: Angle Head = CCW:CW

***SMALLEST ID FOR THE HEAD TO FIT INTO**
2.87" for 153 Model
3.62" for 155 Model
4.57" for 157 Model

BT FLANGE TOOL SHANK FOR TAPPING APPLICATION

TAPER	ORDER NO	RANGE A	COLLET	B	C	D	E	F	G	H	J	K	S**	WT.	FIG.
30	230-153-5	#4 - 1/4 HAND TAP	#153	4.80	.75	1.38	1.50	1.30	2.20	1.50	.71	2.76	2.56	5.1	1
	230-153-7			7.17								5.12		6.6	
	230-155-5	#4 - 1/2 HAND TAP	#155	4.80	1.14	1.77	1.85	1.18	2.36	2.28		2.76		6.4	
40	240-153-5	#4 - 1/4 HAND TAP	#153	5.31	.75	1.38	1.50	1.30	2.20	1.50	.79	2.76		6.8	
	240-153-8			7.68								5.12		7.5	
	240-155-5	#4 - 1/2 HAND TAP	#155	5.31	1.14	1.77	1.85	1.18	2.36	2.28		2.76		8.2	
	240-155-8			7.68								5.12		11.0	
	240-157-6	#4 - 5/8 HAND TAP	#157	5.91	1.26	2.13	2.40	.98	2.62	2.52		3.03		10.4	2
	240-157-8			8.27								5.39		12.8	2

Note: Standard accessories are: 1 each of Angle Axis Spanner Wrench, Hex Wrench, and Orientation Ring Hex Wrench.
Note: Purchase tap sleeves (p53) and positioning block (p54) separately.
Note: Furnished with tapered positioning pin for 40 taper and with straight positioning pin for 30 taper models.
Note: The weight is in lb.
Note: ** means S dimension of 2.36 is also available for 40 taper models.

MST RITE ANGLE ATTACHMENTS
HALF SERIES - LIGHT DUTY, COMPACT TYPE

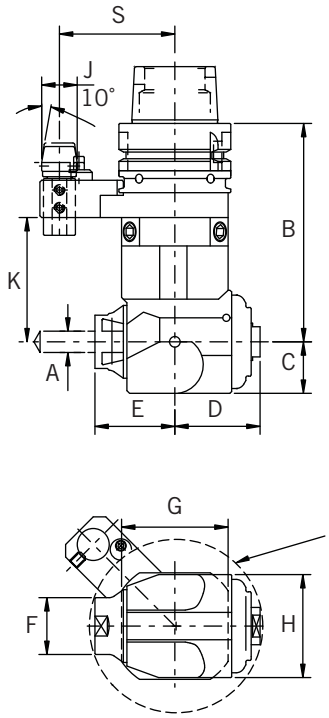

FIG. 1

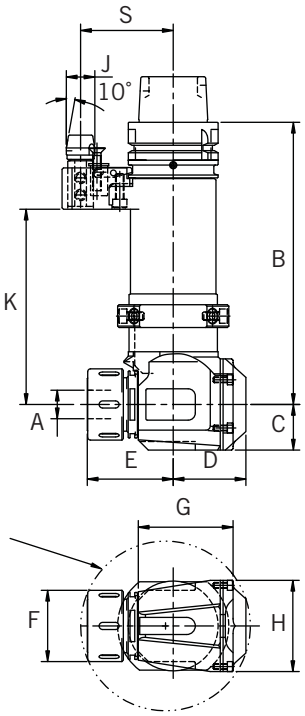

FIG. 2

GEAR RATIO (Spindle: Angle Head)
1:1 for 152 & 154 Models
1 : 0.83 for 156 Model

ROTATION DIRECTION
Spindle: Angle Head = CCW:CW

MAX RPM
6,000 RPM for 152 Model
4,000 RPM for 154 Model
5,000 RPM for 156 Model

***SMALLEST ID FOR THE HEAD TO FIT INTO**
2.68" for 152 Model
3.66" for 154 Model
4.69" for 156 Model

HSK FLANGE TOOL SHANK FOR DRILLING APPLICATION

TYPE	ORDER NO.	RANGE A	COLLET	B	C	D	E	F	G	H	J	K	S**	WT.	FIG.
A63	063-152-7	.039–.276	#070	7.21	.75	1.42	1.26	1.10	2.20	1.50	.79	5.12	2.56	7.7	1
	063-152-10			9.57								7.48		8.5	
	063-154-5	.098–.512	#120	4.84	1.14	1.89	1.77	1.26	2.36	2.28		2.76		7.3	
	063-154-7			7.21								5.12		10.4	
	063-154-10			9.57								7.48		13.2	
	063-156-8	.250–.750	#116	7.80	1.26	2.01	2.36	1.97	2.62	2.52		5.39		11.9	2
	063-156-10			10.16								7.76		14.3	2

Note: Std. accessories: 1 each of Angle Axis Spanner Wrench, Hex Wrench, and Orientation Ring Hex Wrench.
Note: Purchase #070 & #120 collets (p92), #116 collets (p90), and positioning block (p54) separately.
Note: Weight in lb.
Note: Furnished with tapered positioning pin.
Note: ** means S dimension of 2.36 is also available.

MST RITE ANGLE ATTACHMENTS
HALF SERIES - LIGHT DUTY, COMPACT TYPE

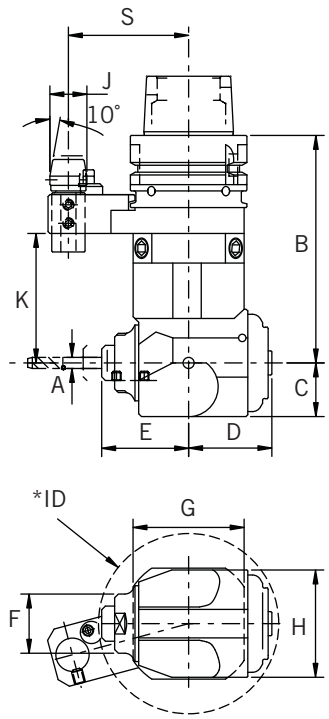

FIG. 1

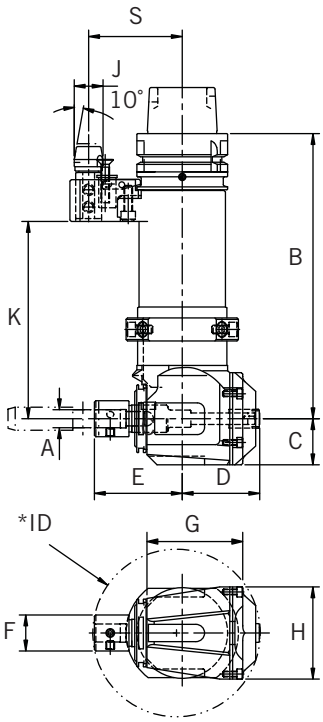

FIG. 2

GEAR RATIO (Spindle: Angle Head)
1:1 for 153 & 155 Models
1 : 0.83 for 157 Model

ROTATION DIRECTION
Spindle: Angle Head = CCW:CW

***SMALLEST ID FOR THE HEAD TO FIT INTO**
2.87" for 153 Model
3.62" for 155 Model
4.57" for 157 Model

HSK FLANGE TOOL SHANK FOR TAPPING APPLICATION

TYPE	ORDER NO.	RANGE A	COLLET	B	C	D	E	F	G	H	J	K	S**	WT.	FIG.
A63	063-153-7	#4 - 1/4 HAND TAP	#153	7.21	.75	1.38	1.50	1.30	2.20	1.50	.79	5.12	2.56	7.7	1
	063-153-10			9.57								7.48		8.5	
	063-155-5	#4 - 1/2 HAND TAP	#155	4.84	1.14	1.77	1.85	1.18	2.63	2.28		2.76		7.3	
	063-155-7			7.21								5.12		10.4	
	063-155-10			9.57								7.48		13.2	
	063-157-8	#4 - 5/8 HAND TAP	#157	7.80	1.26	2.13	2.40	0.98	2.62	2.52		5.39		11.9	2
	063-157-10			10.16								7.76		14.3	2

Note: Std. accessories: 1 each of Angle Axis Spanner Wrench, Hex Wrench, and Orientation Ring Hex Wrench.
Note: Purchase positioning block (p54) and tap sleeves (p53) separately.
Note: Weight in lb.
Note: Furnished with tapered positioning pin.
Note: ** means S dimensions of 3.15 and 3.35 are also available.

MST RITE ANGLE ATTACHMENTS HALF SERIES

PARTS LIST AND FIXTURES FOR 152 AND 153 SERIES

ASSEMBLY FIXTURES

FIG. 1

FIG. 2

ORDER NO.	FIG.
TSH-HF7	1
TSS-HF7	2

Note: TSH-HF7 used on Parts #18 and #19.
Note: TSS-HF7 used on Parts #4

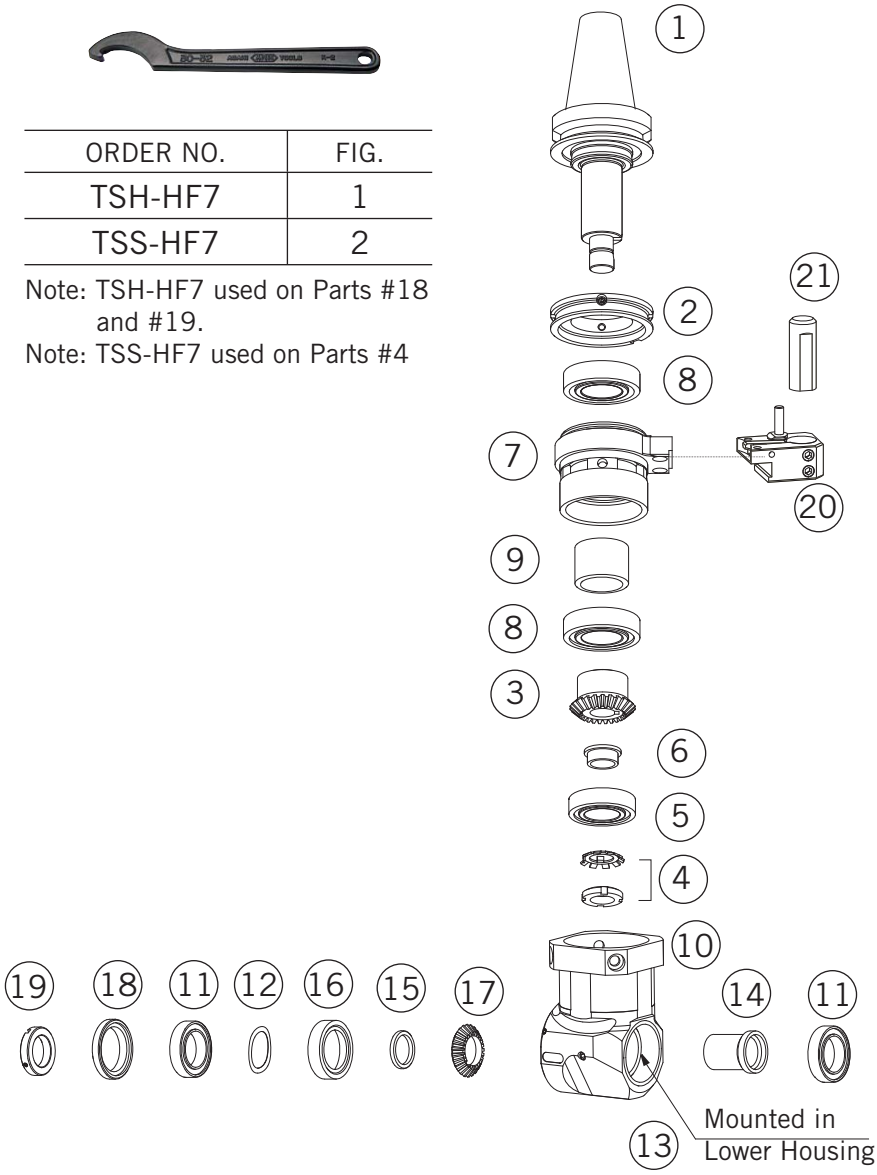

1. Shank
2. Orientation Ring
3. Gear
4. Lock Nut
5. Bearing
6. Star Washer
7. Upper Housing
8. Angular Bearing
9. Collar A
10. Lower Housing
11. Bearing
12. Wave Washer
13. Collar B
14. Collar C
15. Collar D
16. Collar E
17. Gear
18. Cover
19. Lock Nut
20. Bracket
21. Positioning Pin
22. Angle Shaft

MST RITE ANGLE ATTACHMENTS HALF SERIES

PARTS LIST AND FIXTURES FOR 154 AND 155 SERIES

ASSEMBLY FIXTURES

FIG. 1

FIG. 2

ORDER NO.	FIG.
TSH-HF12	1
TSS-HF12	2

Note: TSH-HF12 used on Parts #18 and #19.
Note: TSS-HF12 used on Parts #4

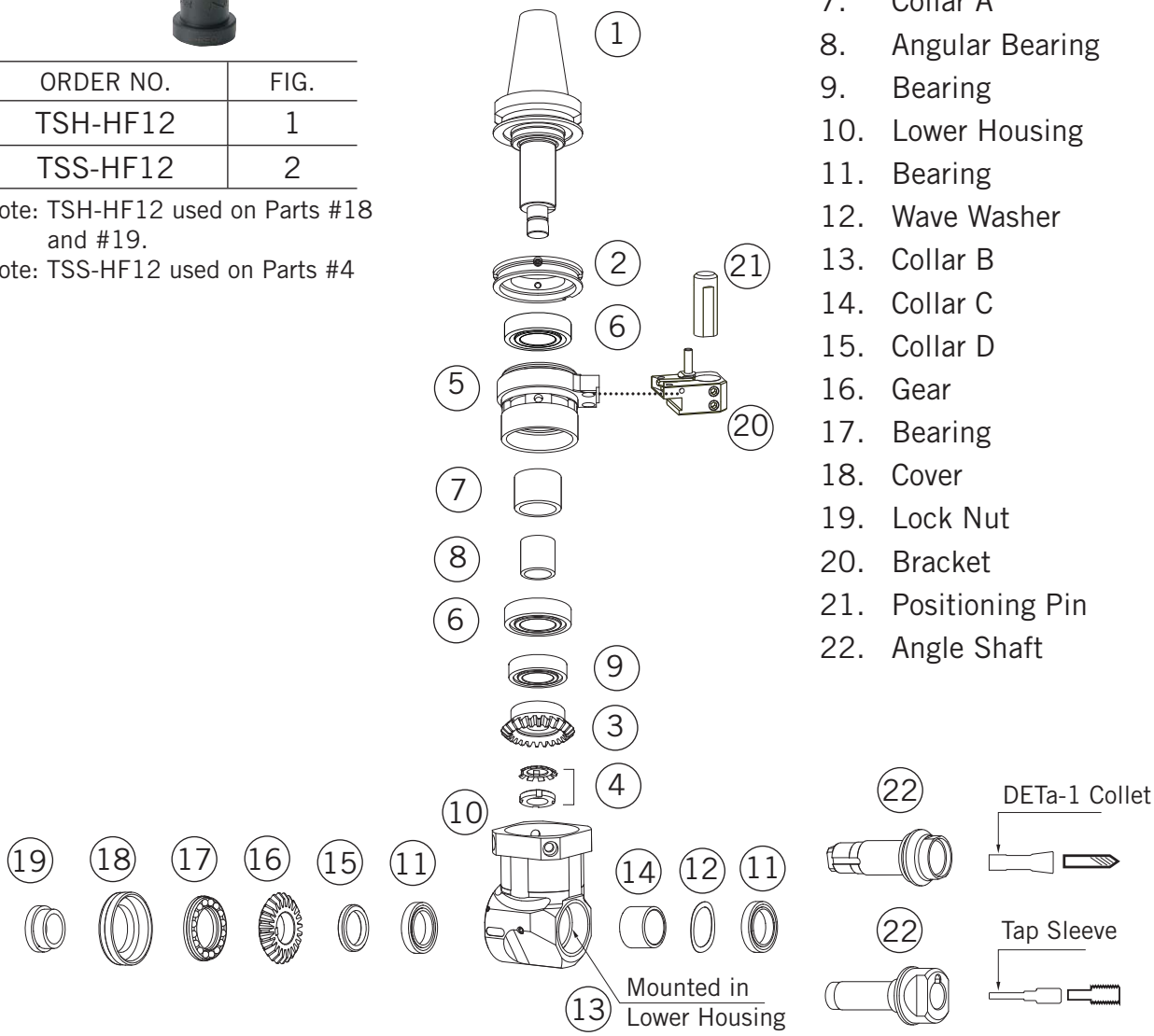

1. Shank
2. Orientation Ring
3. Gear
4. Lock Nut
5. Upper Housing
6. Angular Bearing
7. Collar A
8. Angular Bearing
9. Bearing
10. Lower Housing
11. Bearing
12. Wave Washer
13. Collar B
14. Collar C
15. Collar D
16. Gear
17. Bearing
18. Cover
19. Lock Nut
20. Bracket
21. Positioning Pin
22. Angle Shaft

MST RITE ANGLE ATTACHMENTS HALF SERIES

PARTS LIST AND FIXTURES FOR 156 AND 157 SERIES

ASSEMBLY FIXTURES

FIG. 1

FIG. 2

ORDER NO.	FIG.
TS-HA20	1
TPN-HA20	2

Note: TS-HA20 is used on Parts #10 and #17.
Note: TPN-HA20 is used on Part #21

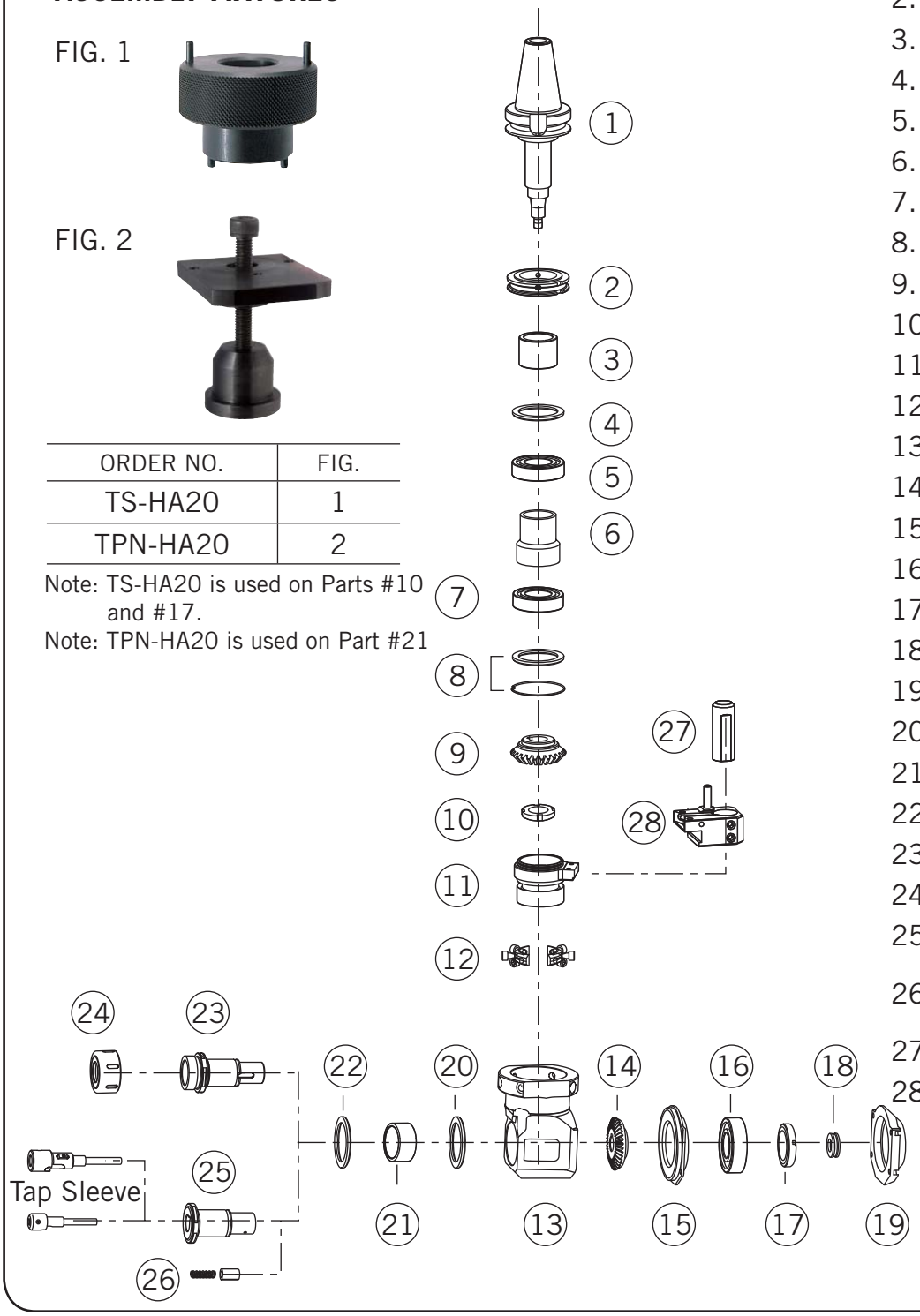

1. Shank
2. Orientation Ring
3. Needle Bearing
4. Lock Nut
5. Angular Bearing
6. Collar A
7. Angular Bearing
8. Ring B
9. Bevel Gear
10. Locking Nut
11. Shank Housing
12. Dove Tail Nut
13. Head Housing
14. Bevel Gear
15. Bearing Support
16. Bearing
17. Locking Nut
18. Thrust Bearing
19. Cover
20. Collar B
21. Needle Bearing
22. Collar C
23. Angle Shaft
24. Collet Nut
25. Angle Shaft
26. Tension Nut & Spring
27. Positioning Pin
28. Pin Bracket

MST RITE ANGLE ATTACHMENTS

UNIVERSAL HALF SERIES - LIGHT DUTY, COMPACT TYPE

175 TYPE
Drilling & Milling

176 & 178 TYPE
Drilling & Milling

177 & 179 TYPE
Tapping

- CAST IRON HOUSING FOR MAXIMUM RIGIDITY
- COMPACT AND LIGHT WEIGHT DESIGN
- CUTTING DIRECTION ANY WHERE FROM 0° TO 360° AND 0° TO ±120°
- EASY ANGLE ADJUSTMENT WITH ANGLE GRADUATION RING AND BUILT-IN DATUM FACES
- EASY MAINTENANCE
- IDEAL FOR DRILLING, LIGHT DUTY MILLING, AND TAPPING APPLICATIONS
- AVAILABLE IN CAT40, CAT50, AND BT40 FLANGE CONFIGURATIONS

MST RITE ANGLE ATTACHMENTS
UNIVERSAL HALF SERIES - LIGHT DUTY, COMPACT TYPE

TYPICAL APPLICATONS

45˚ Tapping

15˚ Drilling

75˚ Counter Bore

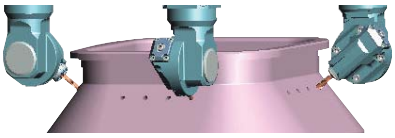

360˚ Free Cutting Direction

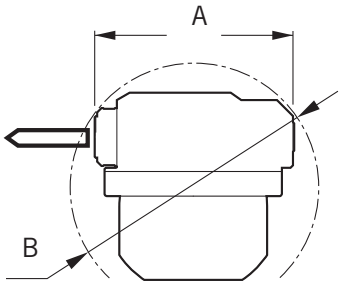

TYPE	A	B*
175	3.15	Ø4.33
177 & 179	3.50	Ø4.57
176 & 178	3.98	Ø5.75

Note: * means when angle axis is set at 90˚

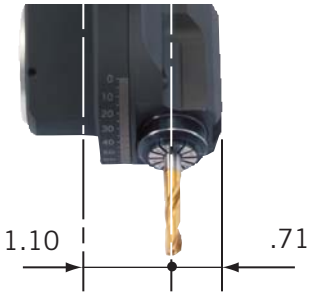

Off set design provies less interference with a workpiece and jig-fixtures.

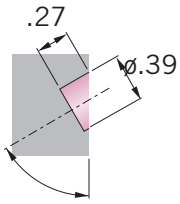

FIG. 1

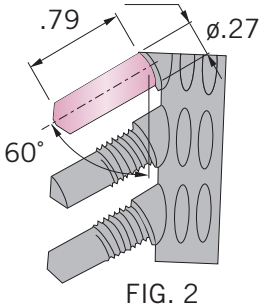

FIG. 2

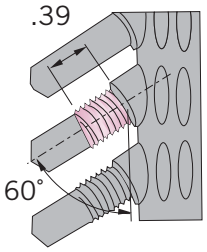

FIG. 3

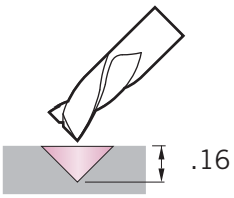

FIG. 4

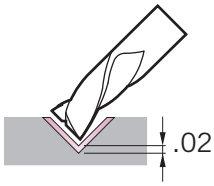

FIG. 5

TYPE OF MACHINING	60˚ COUNTER BORE	60˚ DRILLING	60˚ M8 TAPPING	45˚ End Mill APPLICATION	45˚ End Mill FINISHING APPLICATION
CUTTER	Ø.39-End Mill	Ø.27-Drill	M8-Tap	Ø.39-End Mill	Ø.39-Carbide End Mill
WORK MATERIAL	1050 Steel	1050 Steel	1050 Steel	Aluminum	Aluminum
CUTTING SPEED	82 ft/min	79 ft/min	20 ft/min	207 ft/min	207 ft/min
FEED RATE	.31 in/min	4.33 in/min	12.3 in/min	3.94 in/min	3.94 in/min
SPINDLE SPEED (spindle/angle shaft)	1680/ 800 rpm	2310/ 1100 rpm	525/250 rpm	4200/ 2000 rpm	4200/ 2000 rpm
FIG. NO.	1	2	3	4	5

MST RITE ANGLE ATTACHMENTS

UNIVERSAL HALF SERIES - LIGHT DUTY, COMPACT TYPE FOR DRILLING & LIGHT DUTY MILLING APPLICATIONS

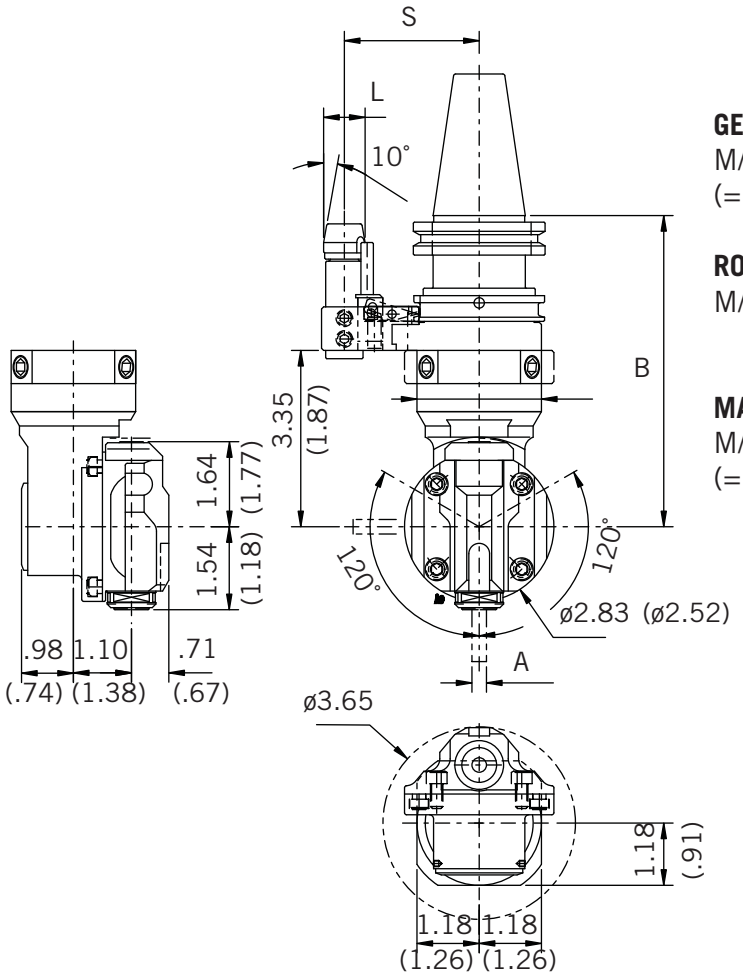

GEAR RATIO
M/C Spindle to Angle Head = 1:0.48
(= 1:0.57 for 230-155-4 Only)

ROTATION DIRECTION
M/C Spindle to Angle Head = CW: CW

MAX RPM
M/C Spindle to Angle Head = 6,300:3,000
(= 7,000:4,000 for 230-155-4 Only)

V FLANGE TOOL SHANK

TAPER	ORDER NO.	RANGE A	COLLET	B	L	S*	WT. (LB.)
40	140-175-6	.039 - .276	#070	5.91	.79	2.56	8.8
50	150-175-6			5.91	1.10	4.33	13.5

BT FLANGE TOOL SHANK

TAPER	ORDER NO.	RANGE A	COLLET	B	L	S*	WT. (LB.)
30	230-175-4	.039 - .276	#070	4.02	.71	2.56	4.0
40	240-175-5			5.31	.79	2.56	8.4

Note: Unit furnished with a set of spanners and wrenches.
Note: Purchase #070 collets (p92) and positioning blocks (p54) separately.
Note: * means S dimension of 2.36 also available for 40 taper model and 3.15 & 3.35 for 50 taper model.
Note: A Straight Positioning Pin furnished with 230-175-4 only.
Note: Dimensions in ( ) applies to 230-175-4 only.

MST RITE ANGLE ATTACHMENTS

UNIVERSAL HALF SERIES - LIGHT DUTY, COMPACT TYPE FOR DRILLING & LIGHT DUTY MILLING APPLICATIONS

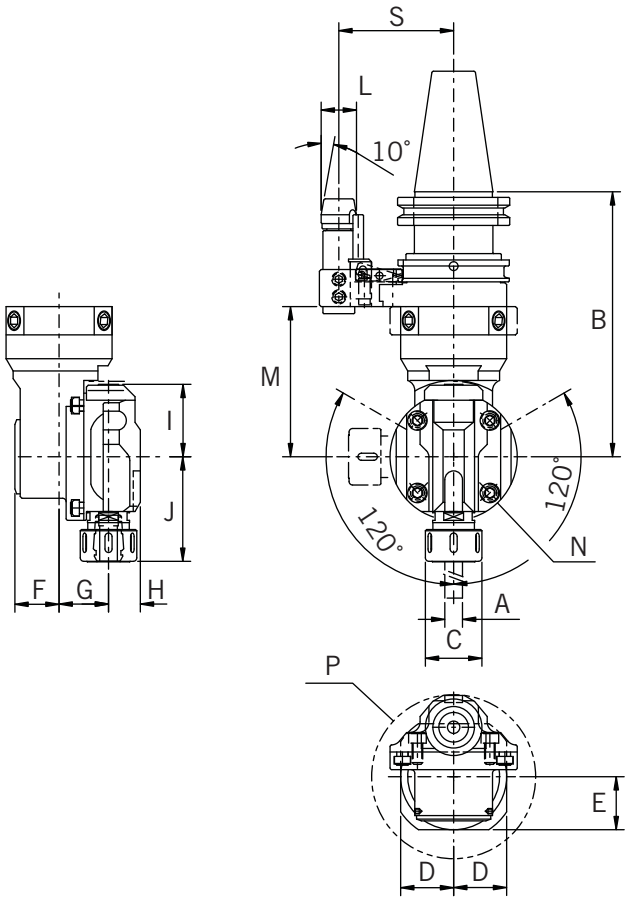

GEAR RATIO
M/C Spindle to Angle Head = 1:0.48

ROTATION DIRECTION
M/C Spindle to Angle Head = CW:CW

MAX RPM
M/C Spindle to Angle Head = 6,300: 3,000

V FLANGE TOOL SHANK

TAPER	ORDER NO.	RANGE A	COLLET	B	C	D	E	F	G
40	140-176-6	.125-.375	#113	5.91	1.26	1.18	1.18	.98	1.10
	140-178-6	.250-.750	#116		1.97	1.54	—	1.22	1.58
50	150-176-6	.125-.375	#113		1.26	1.18	1.18	.98	1.10
	150-178-6	.250-.750	#116		1.97	1.54	—	1.22	1.58

TAPER	ORDER NO.	H	I	J	L	M	N	P	S*	WT (LB)
40	140-176-6	.71	1.61	2.34	.79	3.35	2.83	3.66	2.56	9.0
	140-178-6	.98	1.91	2.76	.79	3.03	3.46	5.91	2.56	11.0
50	150-176-6	.71	1.61	2.34	1.10	3.35	2.83	3.66	4.33	13.7
	150-178-6	.98	1.91	2.76	1.10	3.03	3.46	5.91	4.33	15.8

Note: Unit furnished with a set of spanners and wrenches.
Note: Purchase #113 and #116 collets (p90) and positioning blocks (p54) separately.
Note: * means S dimension of 2.36 also available for 40 taper models and 3.15 & 3.35 for 50 taper models.

MST RITE ANGLE ATTACHMENTS
UNIVERSAL HALF SERIES - LIGHT DUTY, COMPACT TYPE FOR DRILLING & LIGHT DUTY MILLING APPLICATIONS

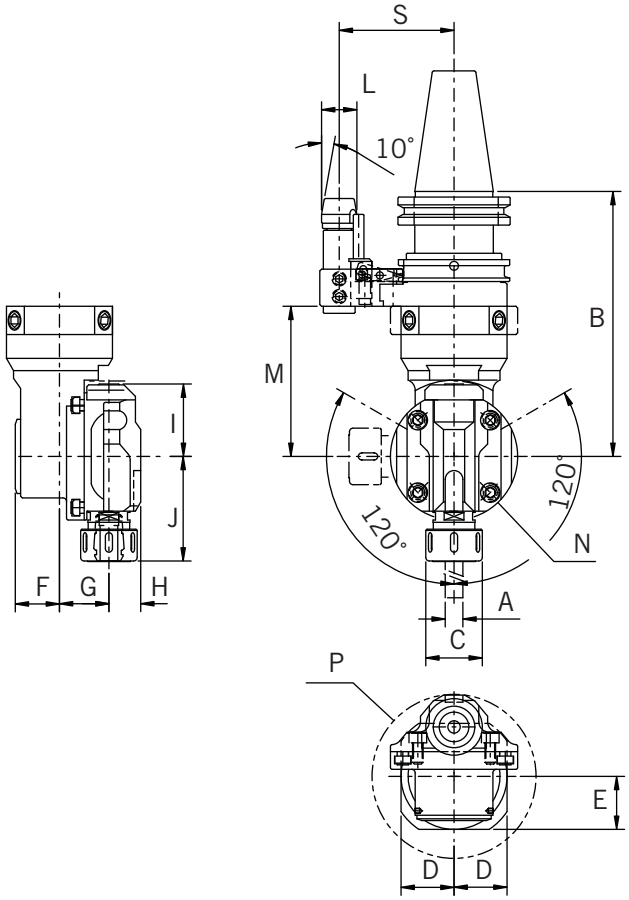

GEAR RATIO
M/C Spindle to Angle Head = 1:0.48

ROTATION DIRECTION
M/C Spindle to Angle Head = CW:CW

MAX RPM
M/C Spindle to Angle Head = 6,300: 3,000

BT FLANGE TOOL SHANK

TAPER	ORDER NO.	RANGE A	COLLET	B	C	D	E	F	G
40	240-176-5	.125-.375	#113	5.31	1.26	1.18	1.18	.98	1.1
	240-178-5	.250-.750	#116	5.31	1.97	1.54	—	1.22	1.58

TAPER	ORDER NO.	H	I	J	L	M	N	P	S*	WT (LB.)
40	240-176-5	.71	1.61	2.34	.79	3.35	2.83	3.66	2.56	8.8
	240-178-5	.98	1.91	2.76	.79	3.03	3.46	5.91	2.56	10.6

Note: Unit furnished with a set of spanners and wrenches.
Note: Purchase #113 and #116 collets (p90) and positioning blocks (p54) separately.
Note: * means S dimension of 2.36 also available.

MST RITE ANGLE ATTACHMENTS
UNIVERSAL HALF SERIES - LIGHT DUTY, COMPACT TYPE FOR TAPPING APPLICATIONS

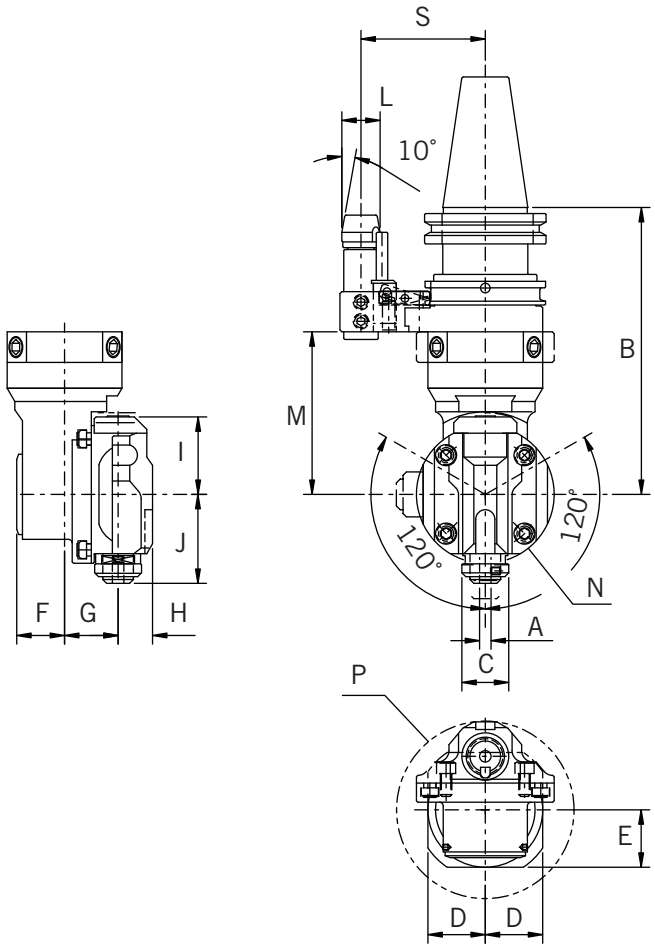

GEAR RATIO
M/C Spindle to Angle Head = 1:0.48

ROTATION DIRECTION
M/C Spindle to Angle Head = CW:CW

V FLANGE TOOL SHANK

TAPER	ORDER NO.	RANGE A	TAP SLEEVE	B	C	D	E	F
40	140-177-6	#4-1/4 HAND TAP	#153	5.91	.97	1.18	1.18	.98
	140-179-6	#4-1/2 HAND TAP	#155		1.42	1.54	—	1.22
50	150-177-6	#4-1/4 HAND TAP	#153		.97	1.18	1.18	.98
	150-179-6	#4-1/2 HAND TAP	#155		1.42	1.54	—	1.22

TAPER	ORDER NO.	G	H	I	J	L	M	N	P	S*	WT (LB.)
40	140-177-6	1.10	.71	1.61	1.83	.79	3.35	2.83	3.66	2.56	8.80
	140-179-6	1.58	.98	1.69	2.24	.79	3.03	3.46	5.91	2.56	11.0
50	150-177-6	1.10	.71	1.61	1.83	1.10	3.35	2.83	3.66	4.33	13.5
	150-179-6	1.58	.98	1.69	2.24	1.10	3.03	3.46	5.91	4.33	15.8

Note: Unit furnished with a set of spanners and wrenches.
Note: Purchase tap sleeves (p53) and positioning blocks (p54), separately.
Note: * means S dimension of 2.36 also available for 40 taper models and 3.15 & 3.35 for 50 taper models.

MST RITE ANGLE ATTACHMENTS
UNIVERSAL HALF SERIES - LIGHT DUTY, COMPACT TYPE FOR TAPPING APPLICATIONS

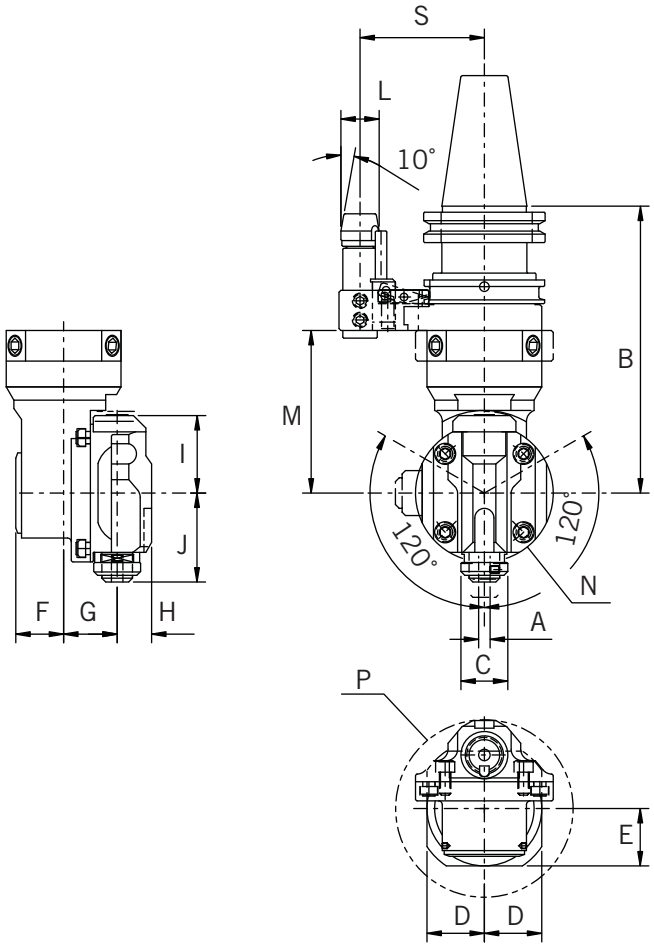

GEAR RATIO
M/C Spindle to Angle Head = 1:0.48
(= 1:0.56 for 230-177-4 Only)

ROTATION DIRECTION
M/C Spindle to Angle Head = CW:CW

BT FLANGE TOOL SHANK

TAPER	ORDER NO.	RANGE A	TAP SLEEVE	B	C	D	E	F
30	230-177-4	#4-1/4 HAND TAP	#153	4.02	.97	1.26	.91	.75
40	240-177-5			5.31	.97	1.18	1.18	.98
	240-179-5	#4-1/2 HAND TAP	#155	5.31	1.42	1.54	—	1.22

TAPER	ORDER NO.	G	H	I	J	L	M	N	P	S*	WT (LB.)
30	230-177-4	1.38	.67	1.89	1.26	.71	1.87	2.52	3.66	2.56	4.0
40	240-177-5	1.10	.71	1.61	1.83	.79	3.35	2.83	3.66	2.56	8.4
	240-179-5	1.58	.98	1.69	2.24	.79	3.03	3.46	5.91	2.56	10.6

Note: Unit furnished with a set of spanners and wrenches.
Note: Purchase tap sleeves (p53) and positioning blocks (p54), separately.
Note: * means S dimension of 2.36 also available.
Note: A 18mm Straight Positioning Pin furnished for 230-177-4 only.

MST RITE ANGLE ATTACHMENTS
UNIVERSAL HALF SERIES
PARTS LIST AND FIXTURES FOR 175, 176 AND 177 SERIES

ASSEMBLY FIXTURES

FIG. 1

FIG. 2

FIG. 3

ORDER NO.	FIG.
FC-32 (for Shank)	1
TP-U7F (for Head)	2
TP-U7	3

Note: TP-U7F is used on Parts #16 and #22.
Note: TP-U7 is used on Part #27

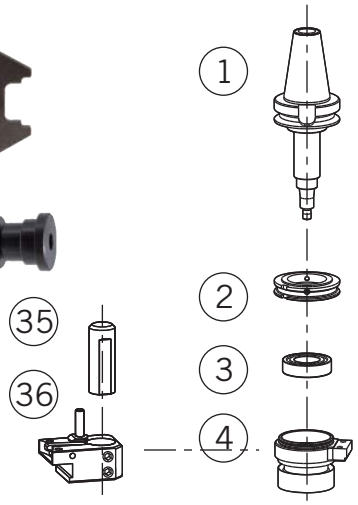

1. Shank
2. Orientation Ring
3. Angular Bearing
4. Housing
5. Dovetail Nut
6. Collar A
7. Collar F
8. Shank Lock Nut
9. Gear 1A
10. Casting
11. Collar C
12. Wave Washer
13. Angular Bearing
14. Collar B
15. Gear 1B
16. Nut & Washer
17. Cover 1
18. Gear 2A
19. T Nut
20. Head
21. Angular Bearing
22. Fix Nut for Angle Shaft
23. Cover 2
24. Collar D

25. Gear 2B
26. Collar E
27. Shell Type Needle Bearing
28. D7 Type Angle Shaft
29. T4 Type Angle Shaft
30. CTA10 Type Angle Shaft
31. Collet Draw Nut

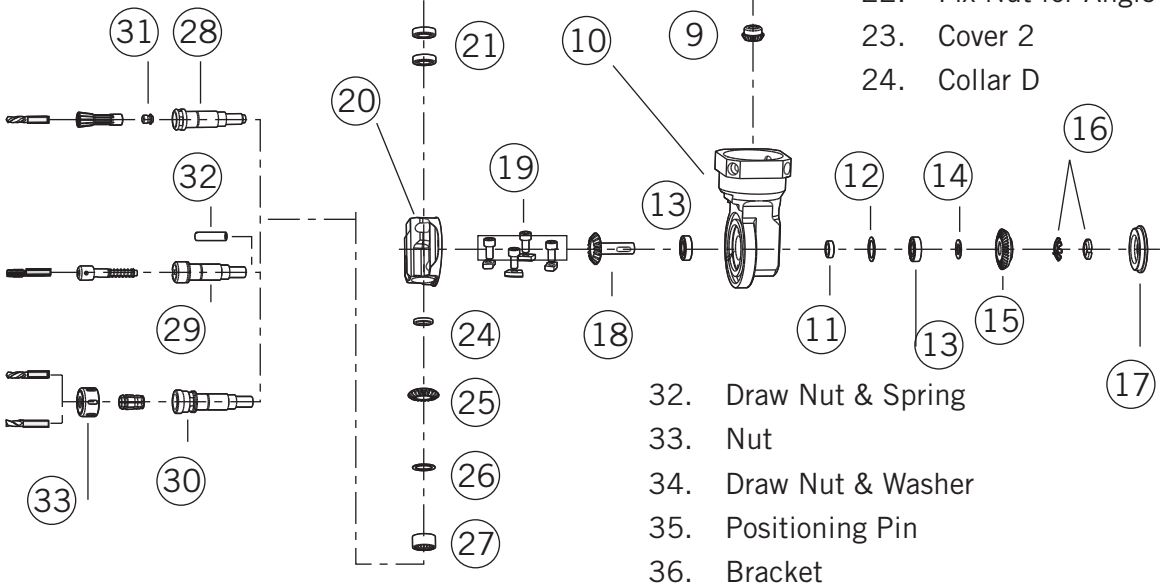

32. Draw Nut & Spring
33. Nut
34. Draw Nut & Washer
35. Positioning Pin
36. Bracket

MST RITE ANGLE ATTACHMENTS
UNIVERSAL HALF SERIES
PARTS LIST AND FIXTURES FOR 178 AND 179 SERIES

ASSEMBLY FIXTURES

FIG. 1

FIG. 2

ORDER NO.	FIG.
TSS-HU20 (for Shank)	1
TSH-HF12 (for Head)	1
TPN-HU20	2

Note: TSS-HU20 is used on Parts #10 and #17.
Note: TSH-HF12 is used on Part #26

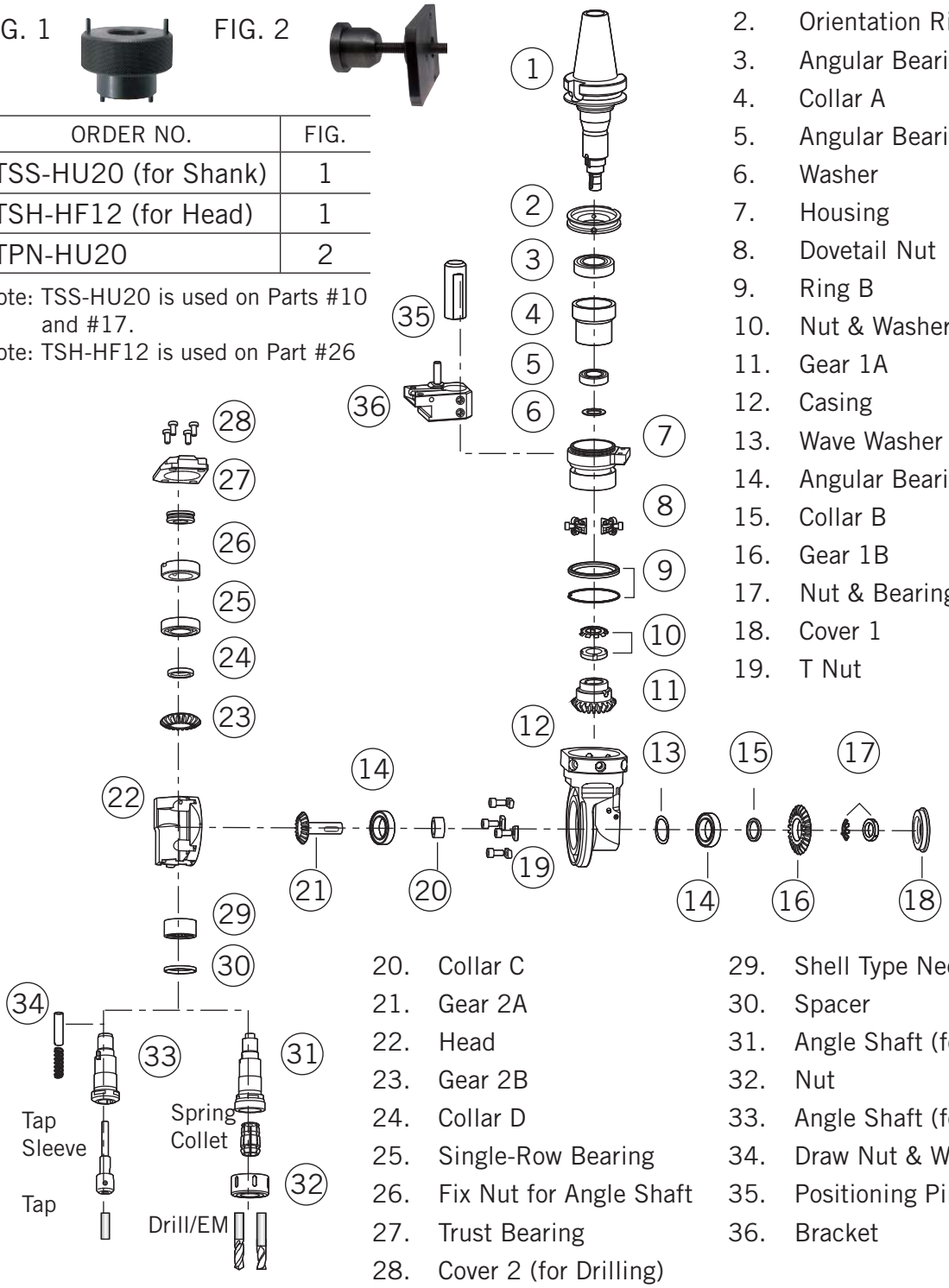

1. Shank
2. Orientation Ring
3. Angular Bearing
4. Collar A
5. Angular Bearing
6. Washer
7. Housing
8. Dovetail Nut
9. Ring B
10. Nut & Washer for Bearing
11. Gear 1A
12. Casing
13. Wave Washer
14. Angular Bearing
15. Collar B
16. Gear 1B
17. Nut & Bearing for Bearing
18. Cover 1
19. T Nut
20. Collar C
21. Gear 2A
22. Head
23. Gear 2B
24. Collar D
25. Single-Row Bearing
26. Fix Nut for Angle Shaft
27. Trust Bearing
28. Cover 2 (for Drilling)
29. Shell Type Needle Bearing
30. Spacer
31. Angle Shaft (for Drilling)
32. Nut
33. Angle Shaft (for Tapping)
34. Draw Nut & Washer
35. Positioning Pin
36. Bracket

MST RITE ANGLE ATTACHMENTS
PARTS AND ACCESSORIES FOR HALF AND UNIVERSAL HALF SERIES

TAP SLEEVES

FOR HALF AND UNIVERSAL HALF SERIES

SIZE	ORDER NO.	ANGLE HEAD	TAP SIZE	D
#153	1-153-004	153 177	#4 - #6	.141
	1-153-008		#8	.168
	1-153-010		#10	.194
	1-153-012		#12	.220
	1-153-013		1/4	.255
#155	1-155-004	155 157 179	#4 - #6	.141
	1-155-008		#8	.168
	1-155-010		#10	.194
	1-155-012		#12	.220
	1-155-013		1/4	.255
	1-155-014		5/16	.318
	1-155-015		3/8	.381
	1-155-017		1/2	.367
#157	1-157-017	157	1/2	.367
	1-157-022		5/8	.480

Note: Size #153 fits into Angle Heads 153 and 177 Types.
Note: Size #155 fits into Angle Heads 155, 157 and 179 Types.
Note: Size #157 fits into Angle Head 157.
Note: Metric size tap sleeves are available upon request.

ANGLE SHAFTS

FOR HALF SERIES

ORDER NO.	ANGLE HEAD
FR-D7	152 Type
FR-D12	154 Type
FR-A20	156 Type
FR-T4	153 Type
FR-T6	155 Type
FR-T12	157 Type

Note: Assembly Fixtures required for conversions & purchase separately.
TSH-HF7 (p41) for #152 and #153.
TSH-HF12 (p42) for #154 and #155
TS-HA20 & TPN-HA20 (p43) for #156 and #157.
FC-32, TP-U7F, & TP-U7 (p51) for #175, #176, and #177
TSS-HU20, TSH-HF12, & TPN-HU20 (p52) for #178 and #179

MST RITE ANGLE ATTACHMENTS
PARTS AND ACCESSORIES

COMMON POSITIONING BLOCK

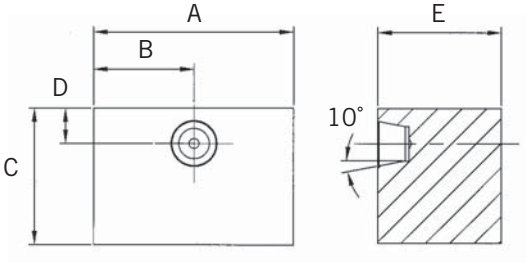

ORDER NO.	A	B	C	D	E
PB-40R	3.6	1.8	2.47	.65	2.23
PB-50R	4.76	2.38	2.47	.85	2.23

Note: Purchase Common Positioning Blocks, PB-40R & PB-50R for Modular Type, Fixed Type, Half, and Universal Half Angle Attachments, except BT30 Flange Tool Shanks.
Note: Common Positioning Blocks must be machined by purchaser to fit specific machines. Consult our sales engineers for more details.

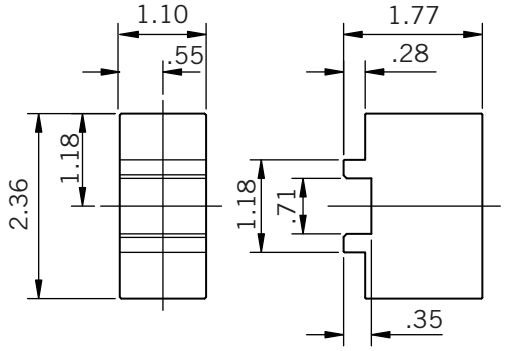

ORDER NO.	APPLICABLE TO
HB-01	230-152-5
	230-152-7
	230-153-5
	230-153-7
	230-154-5
	230-154-7
	230-155-5
	230-155-7

Note: Purchase Common Positioning Block. HB-01 is for Half Angle Attachments with BT30 Flange Tool Shanks.
Note: Common Positioning Blocks must be machined by purchaser to fit specific machines. Please consult our sales engineers for more details.

MOUNTING PLATES

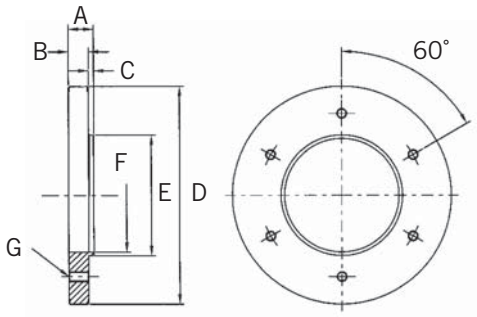

ORDER NO.	A	B	C	D	E	F	G
F-160	.98	.79	.19	6.30	4.21	3.94	6xM8
F-190	.98	.79	.19	8.66	5.71	5.31	6xM10

Note: Mounting plates do not come with mounting holes. Purchaser must add mounting holes to fit a specific machine. Please consult our sales engineers for more details.
Note: Mounting Plates are required for Flange Type Angle Attachments (p28).

MST RITE ANGLE ATTACHMENTS
HORSEPOWER AND TORQUE CHARTS

HORSEPOWER

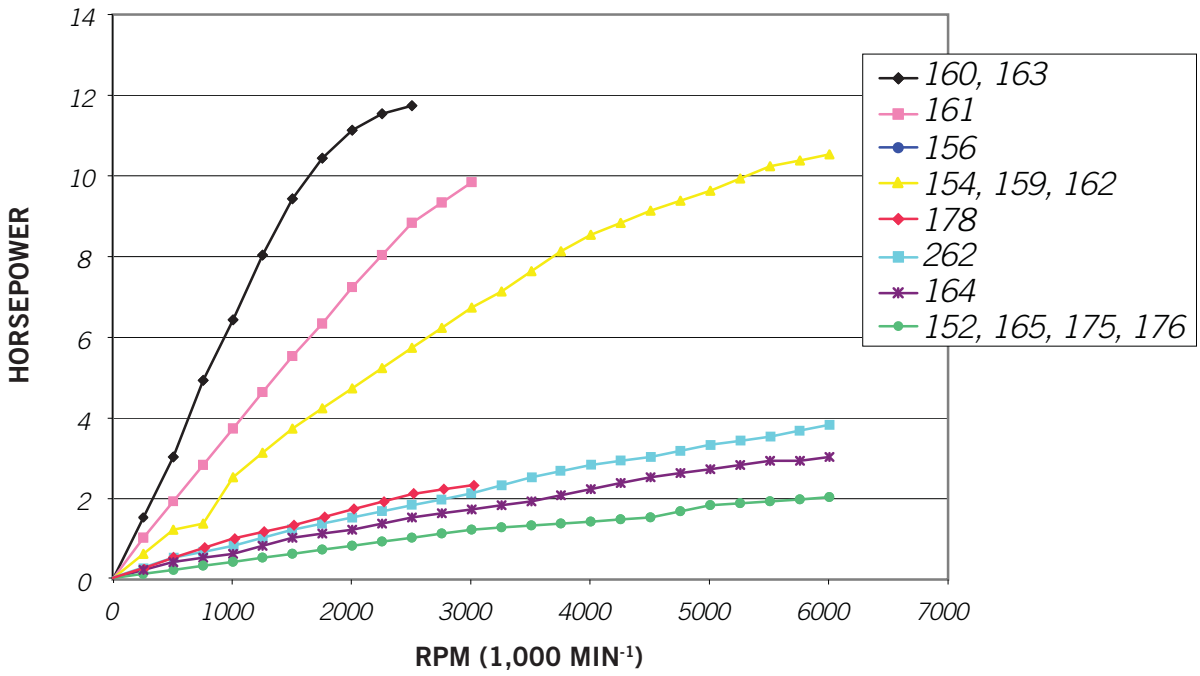

TORQUE

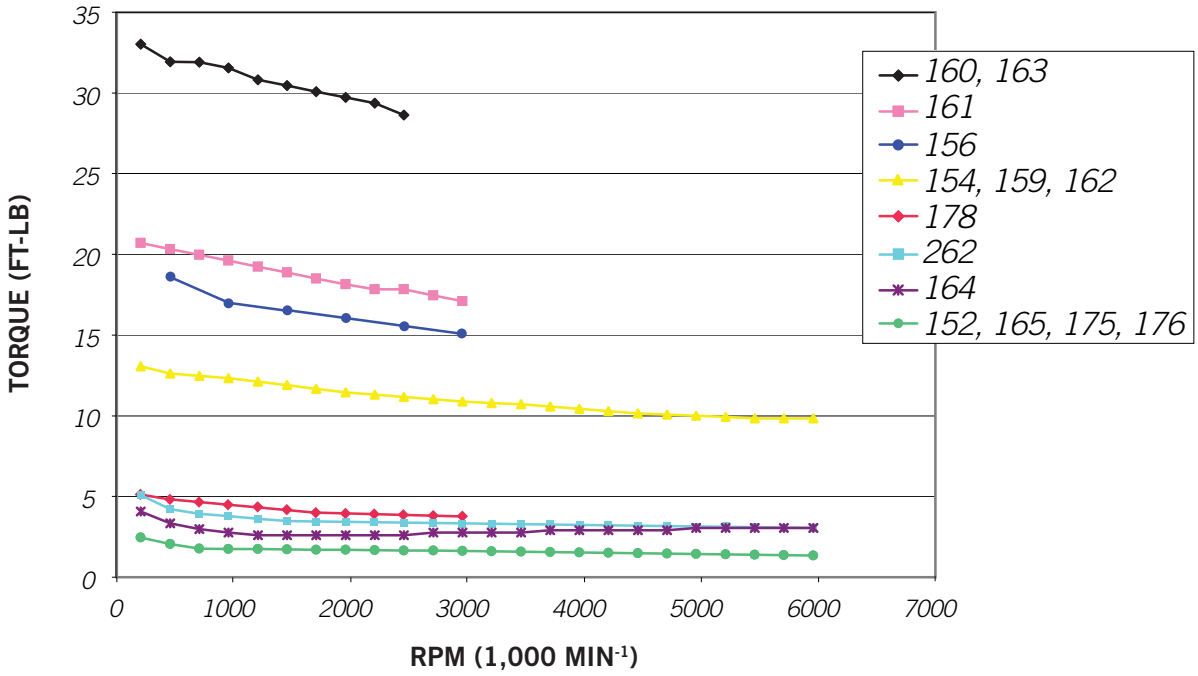

Note: Recommended grease is Mobil Mobilux EP-1 or Shell Alvania No. 1

MST RITE ANGLE ATTACHMENTS

CUSTOM-MADE RITE ANGLE ATTACHMENTS

MST SLIMLINE

SHRINK-FIT CHUCKING SYSTEM

- SUPERB ACCURACY WITHIN .00012" T.I.R.
- INCREASE CARBIDE TOOL LIFE UP TO 300%.
- INTERFERENCE-FREE OPERATION WITH 3° TAPERED BODY AND MINIMUM WALL THICKNESS OF .059"
- OPTIMUM BALANCED DESIGN FOR HIGH SPEED OPERATION OVER 40,000 RPM.
- VARIETY OF PROJECTION LENGTH.
- ADVANCED COOLANT THRU BODY DESIGN.

MST SLIMLINE
SHRINK-FIT CHUCKING SYSTEM

PATENTED

- Slimline is a remarkable compact chucking system that uses a thermally induced shrink-fit procedure to grip carbide tool shanks with outstanding force and accuracy.
- To accomplish this, the Slimline system utilizes the difference in the coefficient of thermal expansion between the adapter and the carbide cutter shank. Before mounting a tool, the adapter tip is heated, causing it to expand. The cutter shank is then inserted. When the adapter cools down, it contracts securely around the shank.
- The heating and cooling of the adapter take place within the temperature range that cannot affects its physical properties. The system always maintains its design level performance.

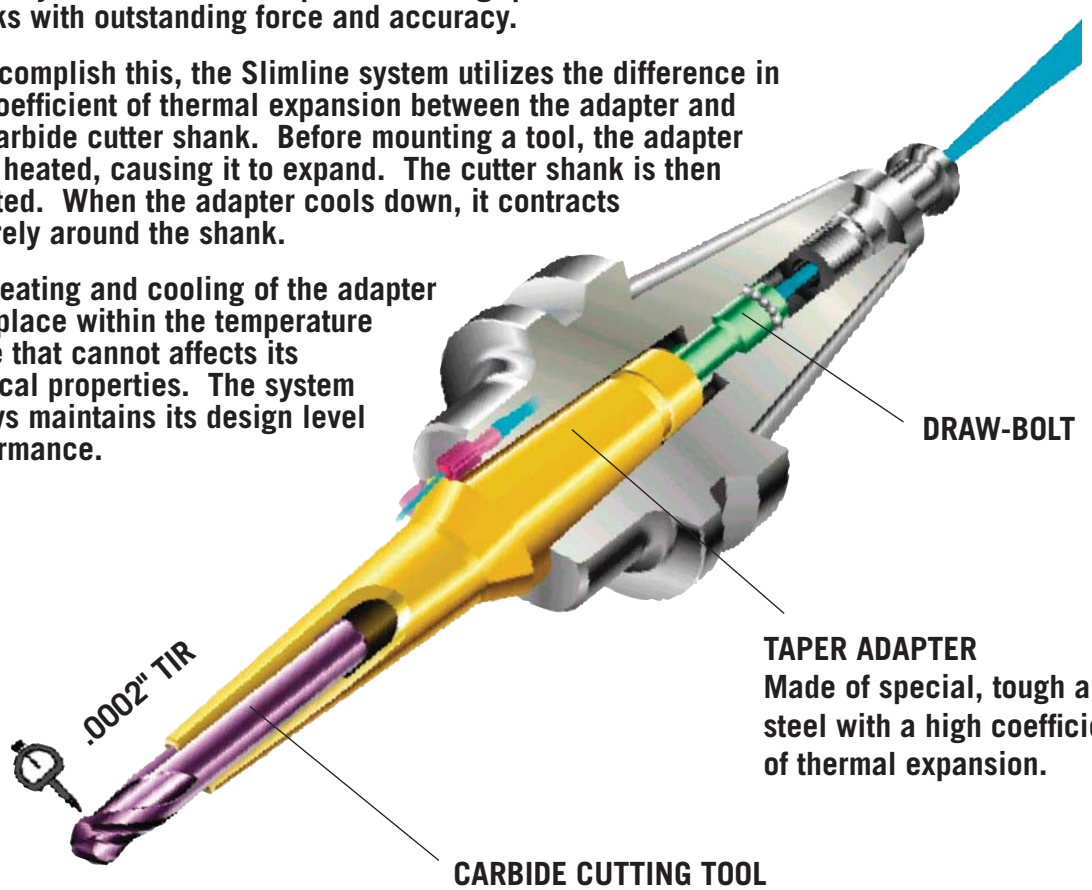

SHRINK-FIT GRIPPING

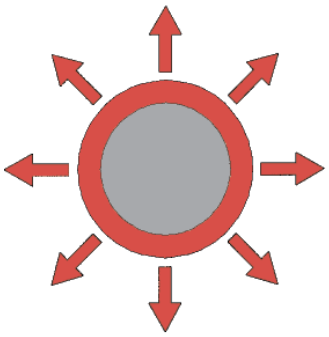

Heating
2-3 Minutes @ 572 ˚F
(open)

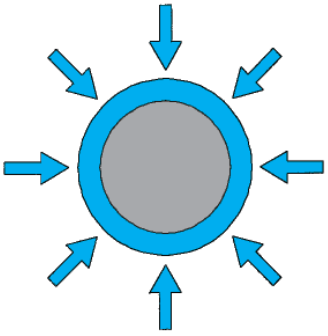

Cooling
(close)

MST SLIMLINE
SHRINK-FIT CHUCKING SYSTEM

MASTER HOLDERS

TAPER ADAPTERS

REGULAR TYPE

- Recommended for general operation.
- Maximum rigidity for heavy radial load.
- Wall thickness: .088" - .157"

SLIM TYPE

- Recommended for semi-finish and finish operations.
- Wall thickness: .059"

FLUSH TYPE

- Coolant-thru holes at the nose of adapters for machining enhancement.

STRAIGHT ADAPTERS

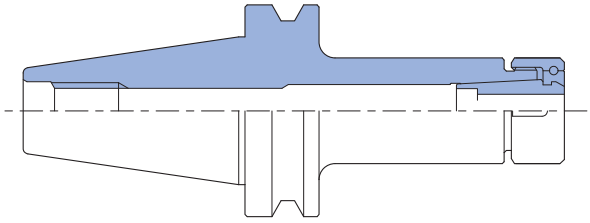

CTA COLLET CHUCK

- Available in Regular and Slim types
- Available in Solid Carbide shanks for vibration-free maching with max. rigidity
- Recommended to use with CTA/CTH Collet Chucks (p69) for optimum accuracy.

CUSTOM MODIFICATION

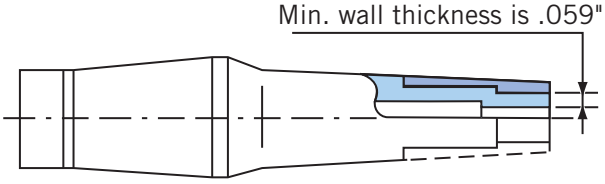

The Slimline's design allows machining in very tight spaces. Nonetheless, users with a need for an even slimmer toolholder can turn down the outside diameter. To assist in modifications, a complete set of Slimline CAD drawings is available.

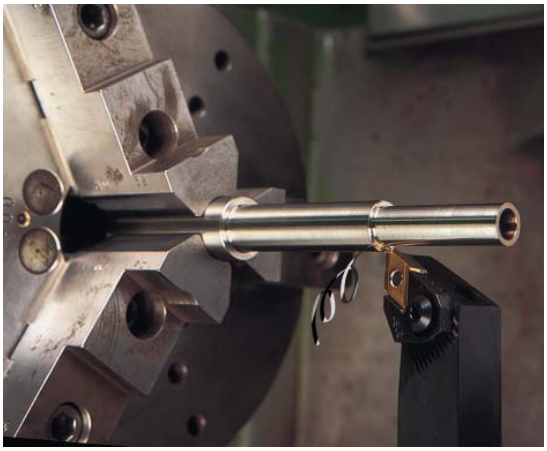

MST SLIMLINE
SHRINK-FIT CHUCKING SYSTEM
MASTER HOLDERS

V FLANGE TOOL SHANK

FIG. 1

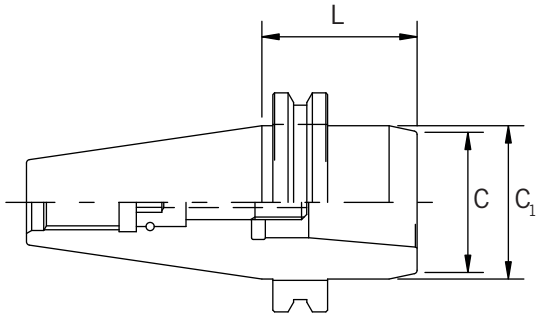

FIG. 2

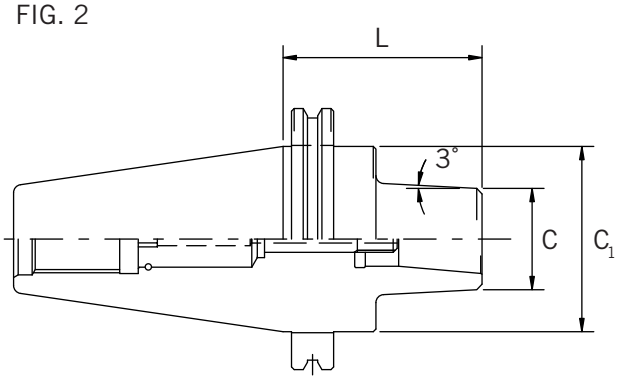

TAPER	ORDER NO.	L	C	C_1	WT (LB.)	FIG.
40	140-510-2	1.77	1.61	1.75	2.4	1
50	150-510-3	2.95	1.50	2.75	7.3	2

Note: Purchase Slimline adapters and wrench, W-135 (p78), separately.

BT FLANGE TOOL SHANK

FIG. 1

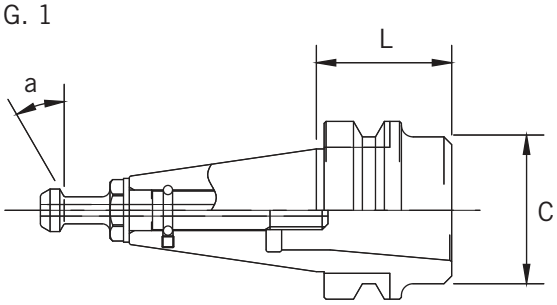

FIG. 2

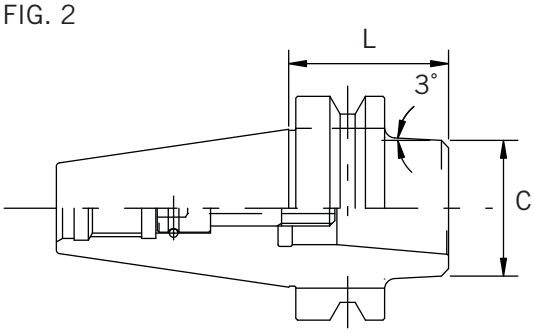

TAPER	ORDER NO.	RET KNOB	a	L	C	WT (LB.)	FIG.
30	230-510-1A	MAS-I	45˚	1.38	1.50	1.3	1
	230-510-1B	MAS-II	30˚				
40	240-510-2	—	—	1.77		2.4	2

Note: Purchase Slimline adapters and wrench, W-135 (p78) for 240-510-2, separately.
Note: 230-510-1A comes with a special retention knob/draw bolt in MAS-I (2300-10) configuration.
230-510-1B comes with a special retention knob/draw bolt in MAS-II (2300-20) configuration.

MST SLIMLINE
SHRINK-FIT CHUCKING SYSTEM
MASTER HOLDERS

FIG. 1

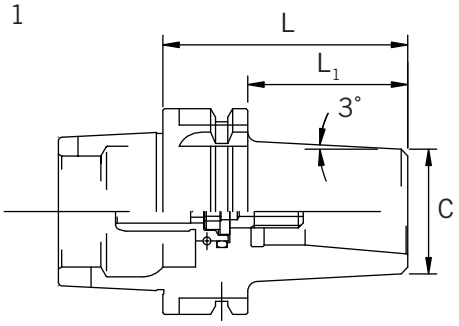

FIG. 2

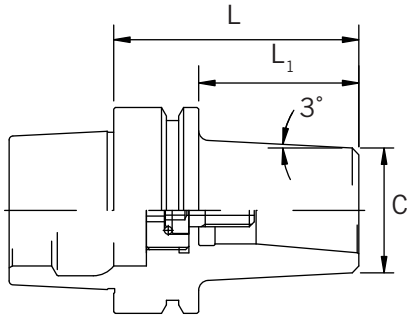

FIG. 3

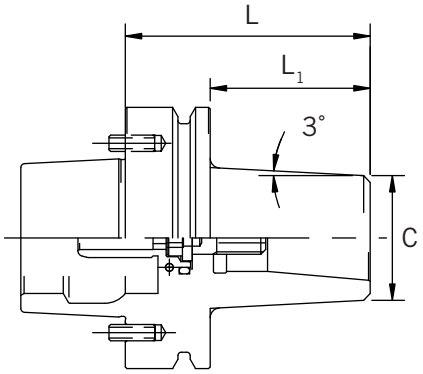

FIG. 4

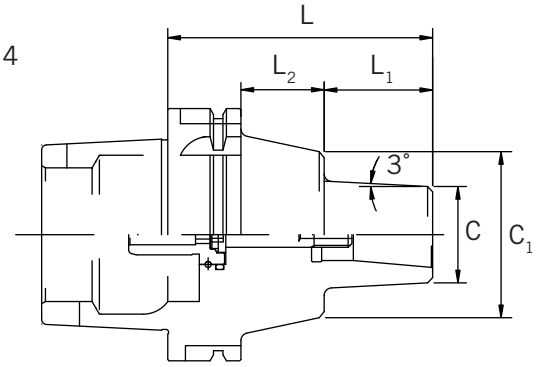

HSK FLANGE TOOL SHANK

TAPER	ORDER NO.	L	L_1	L_2	C	C_1	WT. (LB.)	FIG.
E50	050E-510-3	2.95	1.93	—	1.50	—	1.8	2
A63	063-510-3						2.2	1
E63	063E-510-3							2
F63	063F-510-3							2
F80	080FPD-510-3						2.5	3
A100	100-510-4	4.13	1.69	1.30		2.56	7.5	4

Note: Purchase Slimline adapters and wrenches, W-135 (p78), separately.
Note: Coolant duct is furnished with 063-510-3 and 100-510-4 only.
Note: 080FPD-510-3 is for Makino MAG machines only.

MST SLIMLINE
SHRINK-FIT CHUCKING SYSTEM
TAPER ADAPTERS - REGULAR TYPE

- **GUARANTEED ACCURACIES At Length of 4X DIA. ..... .0002" TIR**
- **GROUND CHUCK BODY FOR PERFECT TOOL BALANCE**
- **ADVANCED COOLANT THRU BODY DESIGN**

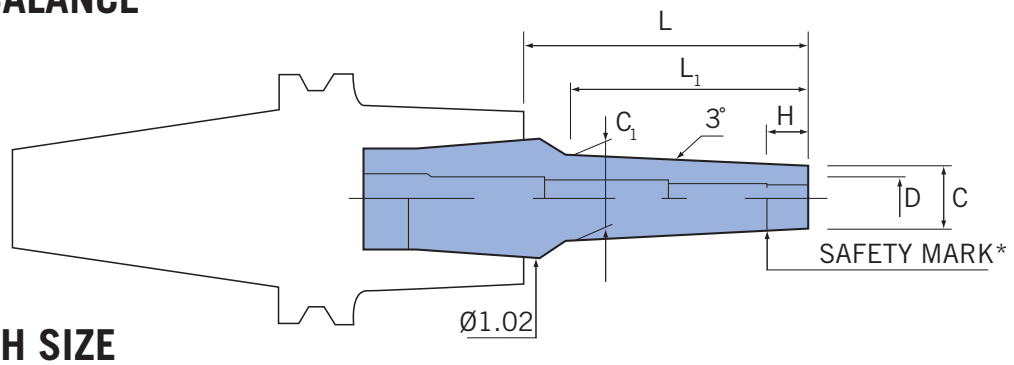

INCH SIZE

ORDER NO.	D	L	L_1	C	C_1	H	MAX INSERTION LENGTH
510-2299-1		1.38	.87		.45	.39	2.56
510-2299-2	.1250	2.17	1.65	.36	.53	.38	3.35
510-2299-3		3.15	2.64		.64	.39	4.33
510-2300-1		1.38	.87		.51	.59	2.56
510-2300-2	.1875	2.17	1.65	.42	.60	.58	3.35
510-2300-3		3.15	2.64		.70	.59	4.33
510-2301-1		1.38	.87		.58	.71	2.56
510-2301-2	.2500	2.17	1.65	.49	.66	.70	3.35
510-2301-3		3.15	2.64		.76	.71	4.33
510-2303-1		1.38	.87		.70		
510-2303-2	.3750	2.17	1.65	.61	.78		
510-2303-3		3.15	2.64		.89	1.18	2.36
510-2304-1		1.38	.87		.91		
510-2304-2	.5000	2.17	1.99	.81	—		
510-2304-3		3.15	—		1.00		

Note: Use with carbide cutting tools only.
Note: * means carbide cutting tool shank should be inserted beyond the safety mark for optimum accuracy and rigidity.
Note: Require a cutter shank tolerance of h6: Ø1/8" - Ø3/16" and h7: Ø1/4" - Ø1/2", per British Standard Limits of Tolerance for selected shafts: BS4500:1969.

MST SLIMLINE
SHRINK-FIT CHUCKING SYSTEM
TAPER ADAPTERS - REGULAR TYPE

- **GUARANTEED ACCURACIES At Length of 4X DIA. ..... .0002" TIR**
- **GROUND CHUCK BODY FOR PERFECT TOOL BALANCE**
- **ADVANCED COOLANT THRU BODY DESIGN**

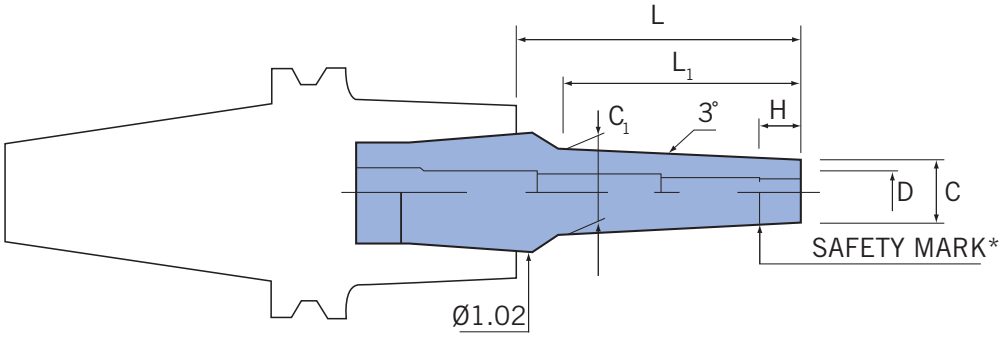

METRIC SIZE

ORDER NO.	D	L	L_1	C	C_1	H	MAX INSERTION LENGTH
510-2003-1	3MM	1.38	.87	.30	.39	.38	2.56
510-2003-2		2.17	1.65		.47		3.35
510-2003-3		3.15	2.64		.57		4.33
510-2004-1	4MM	1.38	.87	.39	.48	.46	2.56
510-2004-2		2.17	1.65		.57		3.35
510-2004-3		3.15	2.64		.67		4.33
510-2006-1	6MM	1.38	.87	.47	.56	.70	2.56
510-2006-2		2.17	1.65		.65		3.35
510-2006-3		3.15	2.64		.75		4.33
510-2008-1	8MM	1.38	.87	.55	.64	.98	2.56
510-2008-2		2.17	1.65		.72		3.35
510-2008-2		3.15	2.64		.83		4.33
510-2010-1	10MM	1.38	.87	.63	.72	1.18	2.36
510-2010-2		2.17	1.65		.80		
510-2010-3		3.15	2.64		.91		
510-2012-1	12MM	1.38	.87	.79	.88	1.18	2.36
510-2012-2		2.17	1.65		.96		
510-2012-3		3.15	—		1.00		

Note: Use with carbide cutting tools only.
Note: * means carbide cutting tool shank should be inserted beyond the safety mark for optimum accuracy and rigidity.
Note: Require a cutter shank tolerance of h6: Ø3MM - Ø4MM and h7: Ø6MM - Ø12MM, per Bristish Standard Limits of Tolerance for selected shafts: BS4500:1969.

MST SLIMLINE
SHRINK-FIT CHUCKING SYSTEM
TAPER ADAPTERS - SLIM TYPE

- **GUARANTEED ACCURACIES At Length of 4X DIA. ..... .0002" TIR**
- **ADVANCED COOLANT THRU BODY DESIGN**
- **GROUND CHUCK BODY FOR PERFECT TOOL BALANCE**

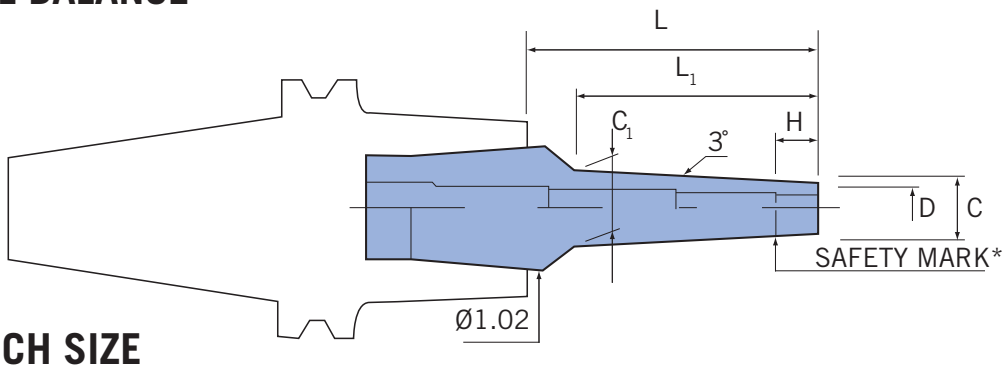

INCH SIZE

ORDER NO.	D	L	L_1	C	C_1	H	MAX INSERTION LENGTH
510-3299-1	.1250	1.38	.87	.24	.33	.38	2.56
510-3299-2		2.17	1.65		.41		3.35
510-3299-3		3.15	2.64		.52		4.33
510-3299-4		4.33	3.82		.64		5.51
510-3300-1	.1875	1.38	.87	.31	.04	.58	2.56
510-3300-2		2.17	1.65		.48		3.35
510-3300-3		3.15	2.64		.58		4.33
510-3300-4		4.33	3.82		.71		5.51
510-3301-1	.2500	1.38	.87	.37	.46	.70	2.56
510-3301-2		2.17	1.65		.54		3.35
510-3301-3		3.15	2.64		.64		4.33
510-3301-4		4.33	3.82		.77		5.51
510-3303-1	.3750	1.38	.87	.49	.58	1.18	2.36
510-3303-2		2.17	1.65		.66		
510-3303-3		3.15	2.64		.77		
510-3303-4		4.33	3.82		.89		
510-3304-1	.5000	1.38	.87	.62	.71	1.18	2.36
510-3304-2		2.17	1.65		.79		
510-3304-3		3.15	2.64		.89		
510-3304-4		4.33	—		—		

Note: Use with carbide cutting tools only.
Note: * means carbide cutting tool shank should be inserted beyond the safety mark for optimum accuracy and rigidity.
Note: Require a cutter shank tolerance of h6: Ø1/8" - Ø3/16" and h7: Ø1/4" - Ø1/2", per British Standard Limits of Tolerance for selected shafts: BS4500:1969.

MST SLIMLINE
SHRINK-FIT CHUCKING SYSTEM
TAPER ADAPTERS - SLIM TYPE

- **GUARANTEED ACCURACIES At Length of 4X DIA. ..... .0002" TIR**
- **ADVANCED COOLANT THRU BODY DESIGN**
- **GROUND CHUCK BODY FOR PERFECT TOOL BALANCE**

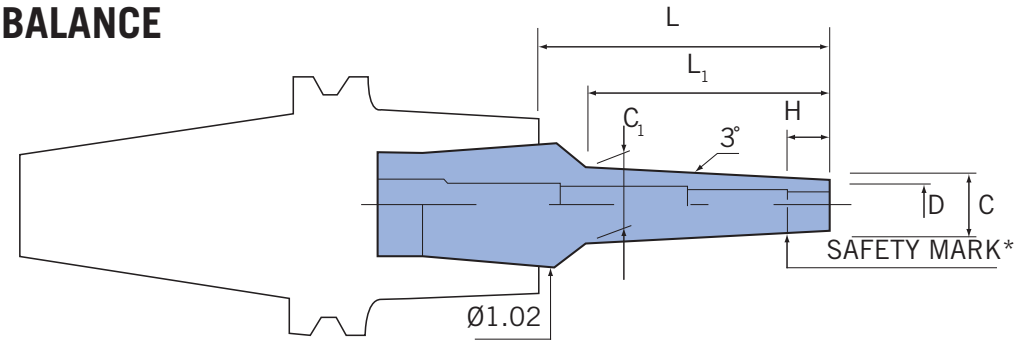

METRIC SIZE

ORDER NO.	D	L	L_1	C	C_1	H	MAX INSERTION LENGTH
510-3003-1	3MM	1.38	.87	.24	.33	.38	2.56
510-3003-2		2.17	1.65		.41		3.35
510-3003-3		3.15	2.64		.51		4.33
510-3003-4		4.33	3.82		.64		5.51
510-3004-1	4MM	1.38	.87	.28	.37	.46	2.56
510-3004-2		2.17	1.65		.45		3.35
510-3004-3		3.15	2.64		.55		4.33
510-3004-4		4.33	3.82		.68		5.51
510-3006-1	6MM	1.38	.87	.35	.44	.70	2.56
510-3006-2		2.17	1.65		.53		3.35
510-3006-3		3.15	2.64		.63		4.33
510-3006-4		4.33	3.82		.76		5.51
510-3008-1	8MM	1.38	.87	.43	.52	.98	2.56
510-3008-2		2.17	1.65		.61		3.35
510-3008-3		3.15	2.64		.71		4.33
510-3008-4		4.33	3.82		.83		5.51
510-3010-1	10MM	1.38	.87	.51	.60	1.18	2.36
510-3010-2		2.17	1.65		.69		
510-3010-3		3.15	2.64		.79		
510-3010-4		4.33	3.82		.91		
510-3012-1	12MM	1.38	.87	.59	.68	1.18	2.36
510-3012-2		2.17	1.65		.76		
510-3012-3		3.15	2.64		.87		
510-3012-4		4.33	—		—		

Note: Use with carbide cutting tools only.
Note: * means carbide cutting tool shank should be inserted beyond the safety mark for optimum accuracy and rigidity.
Note: Require a cutter shank tolerance of h6: Ø3MM - Ø4MM and h7: Ø6MM - Ø12MM, per British Standard Limits of Tolerance for selected shafts: BS4500:1969.

MST SLIMLINE
SHRINK-FIT CHUCKING SYSTEM
TAPER ADAPTERS - FLUSH TYPE

- **GUARANTEED ACCURACIES At Length of 4X DIA. ..... .0002" TIR**
- **GROUND CHUCK BODY FOR PERFECT TOOL BALANCE**
- **ADVANCED BUILT-IN COOLANT THRU HOLES AT THE NOSE**

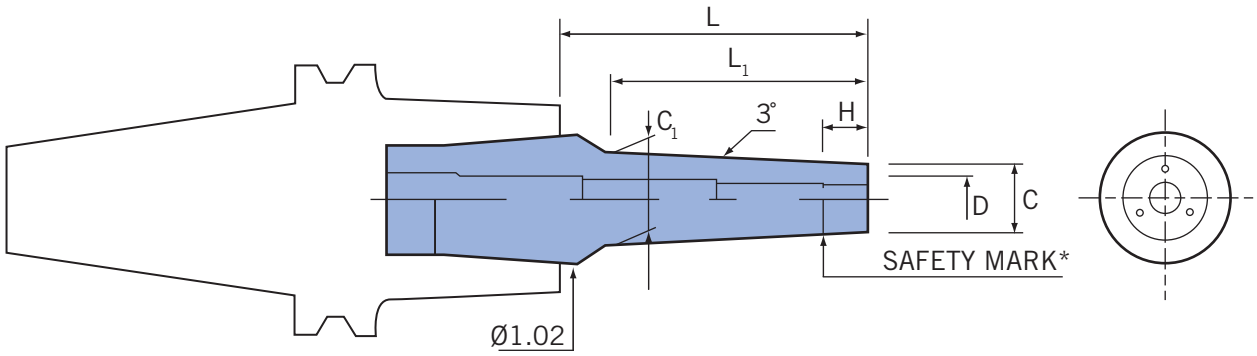

METRIC SIZE

ORDER NO.	D	L	L_1	C	C_1	H	MAX INSERTION LENGTH
510-4003-1 510-4003-2 510-4003-3	3MM	1.38 2.17 3.15	.87 1.65 2.64	.37	.46 .55 .65	.38	2.56 3.35 4.33
510-4004-1 510-4004-2 510-4004-3	4MM	1.38 2.17 3.15	.87 1.65 2.64	.47	.56 .65 .75	.46	2.56 3.35 4.33
510-4006-1 510-4006-2 510-4006-3	6MM	1.38 2.17 3.15	.87 1.65 2.64	.55	.64 .72 .83	.70	2.56 3.35 4.33
510-4008-1 510-4008-2 510-4008-3	8MM	1.38 2.17 3.15	.87 1.65 2.64	.63	.72 .80 .91	.98	2.56 3.35 4.33
510-4010-1 510-4010-2 510-4010-3	10MM	1.38 2.17 3.15	.87 1.65 —	.71	.80 .88 —	1.18	2.36
510-4012-1 510-4012-2 510-4012-3	12MM	1.38 2.17 3.15	.87 1.65 —	.79	.88 .96 —	1.18	2.36

Note: Use with carbide cutting tools only.
Note: * means carbide cutting tool shank should be inserted beyond the safety mark for optimum accuracy and rigidity.
Note: Require a cutter shank tolerance of h6: Ø3MM - Ø4MM and h7: Ø6MM - Ø12MM, per British Standard Limits of Tolerance for selected shafts: BS4500:1969.

MST SLIMLINE
SHRINK-FIT CHUCKING SYSTEM
STRAIGHT ADAPTERS - REGULAR TYPE

- **GUARANTEED ACCURACIES At Length of 4X DIA. ..... .0002" TIR**
- **GROUND CHUCK BODY FOR PERFECT TOOL BALANCE**
- **ADVANCED COOLANT THRU BODY DESIGN**

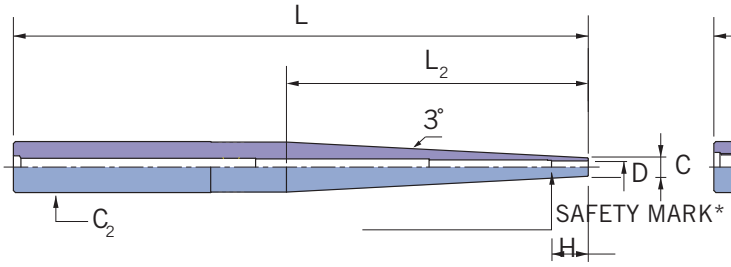

FIG. 1

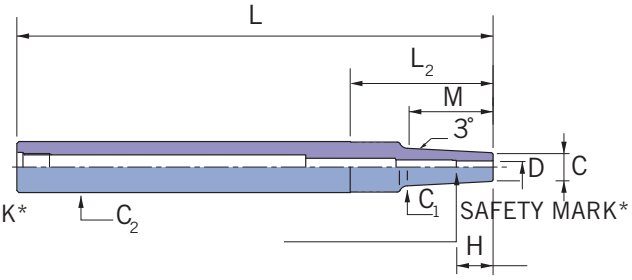

FIG. 2

METRIC SIZE

ORDER NO.	D	L	M	L_2	C	C_1	C_2	H	FIG.
816-2003-4	3mm	3.54	.87	1.18	.30	.39	.63	.35	2
816-2003-6	3mm	5.51	2.64	2.95	.30	.57	.63	.35	2
816-2004-4	4mm	3.54	.87	1.18	.39	.48	.63	.47	2
816-2004-6	4mm	5.51	—	2.36	.39	—	.63	.47	1
820-2006-5	6mm	4.72	1.65	1.97	.55	.72	.79	.71	2
820-2008-4	8mm	3.94	—	1.18	.71	—	.79	.94	1
825-2006-9	6mm	9.45	1.65	2.76	.55	.72	.98	.71	2
825-2008-6	8mm	6.30	1.65	1.97	.71	.88	.98	.94	2
825-2008-8	8mm	8.27	—	3.54	.71		.98	.94	1
825-2010-5	10mm	4.72	—	1.38	.87	—	.98	1.18	1
825-2010-8	10mm	8.27	—	3.54	.87		.98	1.18	1

Note: Use with carbide cutting tools only.
Note: * means carbide cutting tool shank should be inserted beyond the safety mark for optimum accuracy and rigidity.
Note: Require a cutter shank tolerance of h6: Ø3MM - Ø4MM and h7: Ø6MM - Ø10MM, per British Standard Limits of Tolerance for selected shafts: BS4500:1969.

MST SLIMLINE
SHRINK-FIT CHUCKING SYSTEM
STRAIGHT ADAPTERS - SLIM TYPE

- **GUARANTEED ACCURACIES At Length of 4X DIA. ..... .0002" TIR**
- **GROUND CHUCK BODY FOR PERFECT TOOL BALANCE**
- **ADVANCED COOLANT THRU BODY DESIGN**

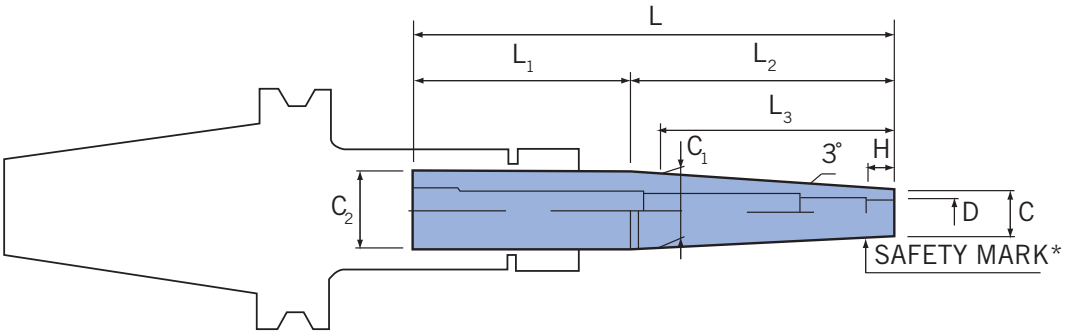

INCH SIZE

ORDER NO.	D	L	L_1	L_2	L_3	C	C_1	C_2	H	MAX INSERT. LENGTH
706-3299-8	.1250	7.87	3.54	4.33	3.82	.24	.64	.750	.38	3.23
706-3301-8	.2500	7.87	3.94	3.94	—	.37	—	.750	.70	3.23
708-3303-9	.3750	9.06	4.72	4.33	3.82	.49	.89	1.00	1.18	2.36

Note: Use with carbide cutting tools only.
Note: * means carbide cutting tool shank should be inserted beyond the safety mark for optimum accuracy and rigidity.
Note: Require a cutter shank tolerance of h6: Ø1/8" - Ø3/16" and h7: Ø1/4" - Ø1/2", per British Standard Limits of Tolerance for selected shafts: BS4500:1969.

MST SLIMLINE
SHRINK-FIT CHUCKING SYSTEM
STRAIGHT ADAPTERS - SLIM TYPE

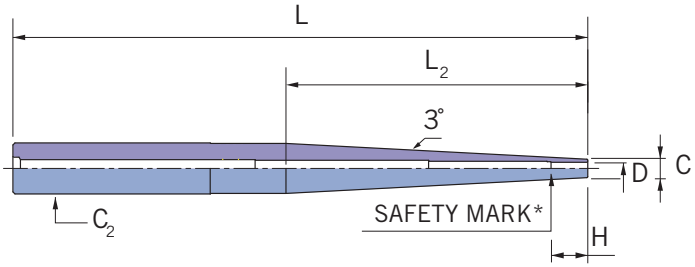

FIG. 1

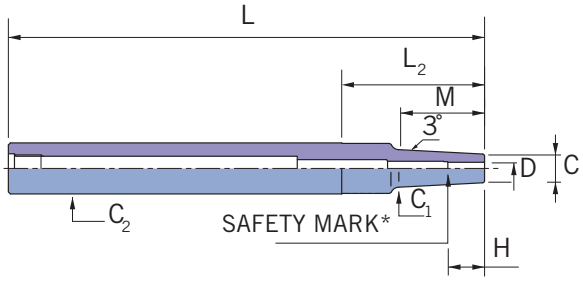

FIG. 2

METRIC SIZE

ORDER NO.	D	L	L_2	C	C_1	C_2	H	FIG.
810-3003-3	3mm	3.15	1.38	.24	—	.39	.35	1
810-3004-3	4mm			.28			.47	1
812-3006-3	6mm			.35		.47	.71	1
816-3008-5	8mm	4.53	1.97	.43	—	.63	.94	1
820-3003-8	3mm	7.87	4.33	.24	16.2	.79	.35	2
820-3004-8	4mm			.28	17.2		.47	2
820-3006-7	6mm	6.89	4.13	.35	—		.71	1
820-3008-7	8mm	6.89	3.35	.43			.94	1
820-3010-6	10mm	5.71	2.76	.51			1.18	1
820-3012-6	12mm	4.72	1.97	.59				1
825-3003-10	3mm	9.65	4.92	.24	16.2	.98	.35	2
825-3004-10	4mm			.28	17.2		.47	2
825-3006-9	6mm	9.06	4.33	.35	19.2		.71	2
825-3008-9	8mm			.43	21.2		.94	2
825-3010-9	10mm	10.04	5.31	.51	—		1.18	1
825-3012-9	12mm	9.06	4.33	.59	—			1

Note: M dimension for FIG. 2 is 3.82".
Note: Use with carbide cutting tools only.
Note: * means carbide cutting tool shank should be inserted beyond the safety mark for optimum accuracy and rigidity.
Note: Require a cutter shank tolerance of h6: Ø3MM - Ø4MM and h7: Ø6MM - Ø12MM, per British Standard Limits of Tolerance for selected shafts: BS4500:1969.

MST SLIMLINE
SHRINK-FIT CHUCKING SYSTEM
STRAIGHT SHANK - CARBIDE

- **GUARANTEED ACCURACIES At Length of 4X DIA. ..... .0002" TIR**
- **GROUND CHUCK BODY FOR PERFECT TOOL BALANCE**
- **ADVANCED COOLANT THRU BODY DESIGN**

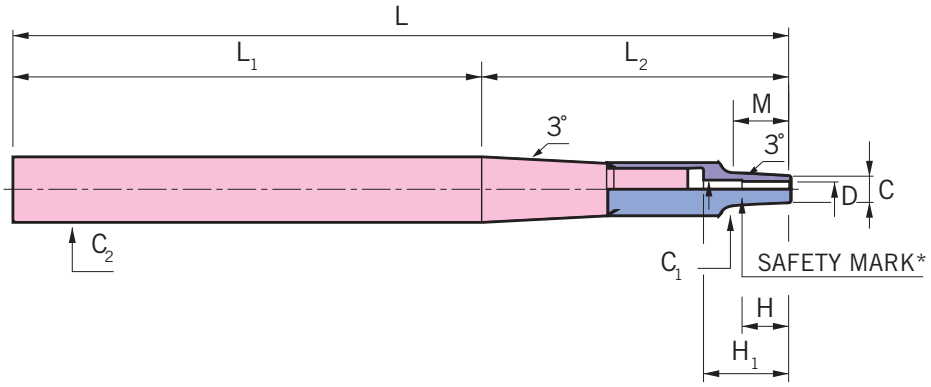

METRIC SIZE

ORDER NO.	D	L	M	L_1	L_2	C	C_1	C_2	H
810C-3003-6	3mm	6.30	.47	4.72	1.57	.23	.29	.39	.33
810C-3004-6	4mm	6.30		4.7	1.57	.28	.33	.39	.47
816C-3003-11	3mm	11.02		7.17	3.86	.23	.29	.63	.35
816C-3004-11	4mm	11.02		7.17	3.86	.28	.33		.47
816C-3006-9	6mm	8.86	.87	6.50	2.36	.39	.48		.91
816C-3008-9	8mm	8.86		6.50	2.36	.51	.60		.94
820C-3006-13	6mm	12.60		8.70	3.90	.39	.48	.79	.71
820C-3008-11	8mm	10.63		7.87	2.76	.51	.60		.94
820C-3010-11	10mm	10.63		3.76	7.87	.63	.72		1.18
825C-3006-14	6mm	14.17		9.53	4.65	.39	.48	.98	.71
825C-3008-14	8mm					.51	.60		.94
825C-3010-14	10mm					.63	.72		1.18

Note: Use with carbide cutting tools only.
Note: * means carbide cutting tool shank should be inserted beyond the safety mark for optimum accuracy and rigidity.
Note: Require a cutter shank tolerance of h6: Ø3MM - Ø4MM and h7: Ø6MM - Ø10MM, per British Standard Limits of Tolerance for selected shafts: BS4500:1969.

MST SLIMLINE

HSK SMALL SHANK, SHRINK-FIT CHUCKING SYSTEM
HSK 25E AND HSK 32E SERIES - REGULAR TYPE

- **GUARANTEED ACCURACIES**
  At Length of 4X DIA. ..... .00012" TIR
- **GROUND CHUCK BODY FOR PERFECT TOOL BALANCE**
- **ADVANCED COOLANT THRU BODY DESIGN**

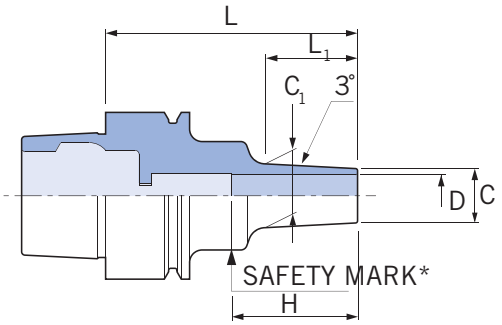

METRIC SIZE

TYPE	ORDER NO.	D	L	L_1	C	C_1	H	WT (lb.)	MAX INSERT LENGTH
E25	E25-2003-1	3MM	1.38	.67	.30	.37	.35	0.13	1.14
	E25-2004-1	4MM	1.38	.67	.39	.46	.47	0.14	1.14
	E25-2006-1	6MM	1.38	.67	.47	.54	.71	0.15	1.02
E32	E32-2003-2	3MM	1.97	.87	.30	.39	.35	0.22	1.65
	E32-2003-3	3MM	2.76	1.65	.30	.47	.35	0.44	2.44
	E32-2003-4	3MM	3.35	1.65	.30	.47	.35	0.44	2.72
	E32-2004-2	4MM	1.97	.87	.39	.48	.47	0.44	1.38
	E32-2004-3	4MM	2.76	1.65	.39	.57	.47	0.44	2.13
	E32-2004-4	4MM	3.35	1.65	.39	.57	.47	0.44	2.72
	E32-2006-2	6MM	1.97	.87	.47	.56	.71	0.44	1.38
	E32-2006-3	6MM	2.76	1.65	.47	.65	.71	0.44	2.13
	E32-2006-4	6MM	3.35	1.65	.47	.65	.71	0.44	2.72
	E32-2008-2	8MM	1.97	.87	.55	.64	.94	0.44	1.54
	E32-2008-3	8MM	3.35	1.65	.55	.72	.94	0.44	2.72
	E32-2010-2	10MM	2.17	.87	.63	.72	1.18	0.44	1.73
	E32-2012-2	12MM	2.17	.87	.79	.88	1.18	0.44	1.73
	E32-2016-2	16MM	2.17	1.38	1.02	N/A	1.26	0.44	1.73

Note: Use with carbide cutting tools only. Coolant Duct is not furnished.
Note: * means carbide cutting tool shank should be inserted beyond the safety mark for optimum accuracy and rigidity.
Note: Inch size holders are available upon request.
Note: Require a cutter shank tolerance of h6: Ø3MM - Ø5MM and h7: Ø6MM - Ø16MM, per British Standard Limits of Tolerance for selected shafts: BS4500:1969.
Note: Shrink-fit tool holders are manufactured pursuant to a license from Tooling Innovations U.S. Pat. No. 5,311,654; 5,582,494; and 4,818,161.

MST SLIMLINE

HSK SMALL SHANK, SHRINK-FIT CHUCKING SYSTEM
HSK 25E AND HSK 32E SERIES - SLIM TYPE

- **GUARANTEED ACCURACIES**
  At Length of 4X DIA. ..... .00012" TIR
- **GROUND CHUCK BODY FOR PERFECT TOOL BALANCE**
- **ADVANCED COOLANT THRU BODY DESIGN**

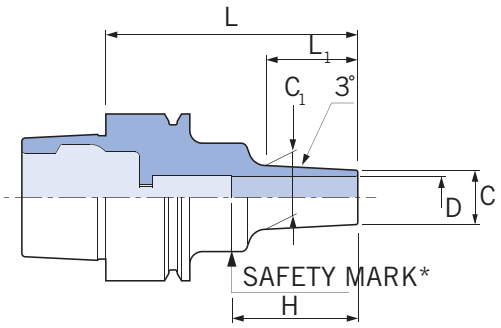

INCH AND METRIC SIZE

TYPE	ORDER NO.	D	L	L_1	C	C_1	H	WT (lb.)	MAX INSERT LENGTH
E25	E25-3003-1	3MM	1.38	.67	.24	.31	.35	0.13	1.14
	E25-3003-2	3MM	1.97	1.26	.24	.37	.35	0.13	1.73
	E25-3299-1	1/8"	1.38	.67	.24	.31	.35	0.13	1.14
	E25-3299-2	1/8"	1.97	1.26	.24	.38	.35	0.13	1.73
	E25-3004-1	4MM	1.38	.67	.28	.35	.47	0.13	1.14
	E25-3004-2	4MM	1.97	1.26	.28	.41	.47	0.13	1.73
	E25-3005-1	5MM	1.38	.67	.31	.39	.59	0.13	1.02
	E25-3006-1	6MM	1.38	.67	.35	.43	.71	0.11	1.02
	E25-3006-2	6MM	1.97	1.26	.35	.49	.71	0.15	1.54
E32	E32-3003-2	3MM	1.97	.87	.24	.33	.35	0.22	1.65
	E32-3003-3	3MM	2.76	1.65	.24	.41	.35	0.44	2.44
	E32-3003-4	3MM	3.35	1.65	.24	.41	.35	0.44	2.72
	E32-3299-2	1/8"	1.97	.87	.24	.33	.35	0.22	1.65
	E32-3004-2	4MM	1.97	.87	.28	.37	.47	0.22	1.38
	E32-3004-3	4MM	2.76	1.65	.28	.45	.47	0.44	2.13
	E32-3004-4	4MM	3.35	1.65	.28	.45	.47	0.44	2.72
	E32-3006-2	6MM	2.76	1.65	.35	.53	.71	0.44	2.13

Note: Use with carbide cutting tools only. Coolant Duct is not furnished.
Note: * means carbide cutting tool shank should be inserted beyond the safety mark for optimum accuracy and rigidity.
Note: Require a cutter shank tolerance of h6: Ø3MM - Ø5MM and h7: Ø6MM, per British Standard Limits of Tolerance for selected shafts: BS4500:1969.
Note: Shrink-fit tool holders are manufactured pursuant to a license from Tooling Innovations U.S. Pat. No. 5,311,654; 5,582,494; and 4,818,161.

MST SLIMLINE

HSK SMALL SHANK, SHRINK-FIT CHUCKING SYSTEM

HSK 40E SERIES - REGULAR TYPE

- **GUARANTEED ACCURACIES**
  At Length of 4X DIA. ..... .00012" TIR
- **GROUND CHUCK BODY FOR PERFECT TOOL BALANCE**
- **ADVANCED COOLANT THRU BODY DESIGN**

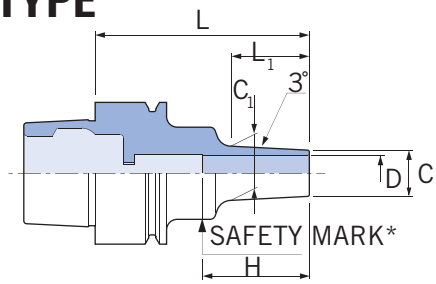

METRIC SIZE

TYPE	ORDER NO.	D	L	L_1	C	C_1	H	WT. (lb.)	MAX INSERT LENGTH
E40	E40-2003-2	3MM	1.97	.87	.30	.39	.35	0.44	1.65
	E40-2003-3	3MM	2.76	1.65	.30	.47	.35	0.44	2.44
	E40-2003-3L	3MM	3.35	1.65	.30	.47	.35	0.66	2.72
	E40-2003-4	3MM	4.33	2.64	.30	.57	.35	0.66	3.7
	E40-2004-2	4MM	1.97	.87	.39	.48	.47	0.44	1.65
	E40-2004-3	4MM	2.76	1.65	.39	.57	.47	0.66	2.44
	E40-2004-3L	4MM	3.35	1.65	.39	.57	.47	0.66	2.72
	E40-2004-4	4MM	4.33	2.64	.39	.67	.47	0.66	3.7
	E40-2006-2	6MM	1.97	.87	.47	.56	.71	0.44	1.54
	E40-2006-3	6MM	2.76	1.65	.47	.65	.71	0.66	2.13
	E40-2006-3L	6MM	3.35	1.65	.47	.65	.71	0.66	2.72
	E40-2006-4	6MM	4.33	2.64	.47	.75	.71	0.88	3.7
	E40-2008-2	8MM	1.97	.87	.55	.64	.94	0.44	1.54
	E40-2008-3	8MM	3.35	1.65	.55	.72	.94	0.66	2.72
	E40-2008-4	8MM	3.94	1.65	.55	.72	.94	0.88	3.31
	E40-2010-2	10MM	2.16	.87	.63	.72	1.18	0.66	1.73
	E40-2010-3	10MM	3.35	1.65	.63	.80	1.18	0.66	2.52
	E40-2010-4	10MM	3.94	1.65	.63	.80	1.18	0.88	2.52
	E40-2012-2	12MM	2.36	.87	.79	.88	1.18	0.66	1.73
	E40-2012-3	12MM	3.15	1.65	.79	.96	1.18	0.88	2.91
	E40-2016-2	16MM	2.36	.87	1.02	1.11	1.26	0.66	1.73
	E40-2020-2	20MM	2.36	1.57	1.26	1.34	1.50	0.88	1.93

Note: Use with carbide cutting tools only. Coolant Duct is not furnished.

Note: * means carbide cutting tool shank should be inserted beyond the safety mark for optimum accuracy and rigidity.

Note: Require a cutter shank tolerance of h6: Ø3MM - Ø5MM and h7: Ø6MM - Ø20MM, per British Standard Limits of Tolerance for selected shafts: BS4500:1969.

Note: Shrink-fit tool holders are manufactured pursuant to a license from Tooling Innovations U.S. Pat. No. 5,311,654; 5,582,494; and 4,818,161.

MST SLIMLINE

HSK SMALL SHANK, SHRINK-FIT CHUCKING SYSTEM

HSK 40E SERIES - SLIM TYPE

- **GUARANTEED ACCURACIES At Length of 4X DIA. ..... .00012" TIR**
- **GROUND CHUCK BODY FOR PERFECT TOOL BALANCE**
- **ADVANCED COOLANT THRU BODY DESIGN**

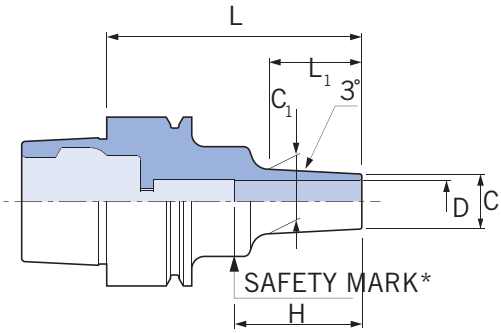

INCH AND METRIC SIZE

TYPE	ORDER NO.	D	L	L_1	C	C_1	H	WT. (lb.)	MAX INSERT LENGTH
	E40-3003-2	3MM	1.97	.87	.24	.33	.35	0.44	1.65
	E40-3003-3	3MM	2.76	1.65	.24	.41	.35	0.44	2.44
	E40-3003-3L	3MM	3.35	1.65	.24	.41	.35	0.66	2.72
	E40-3003-4	3MM	4.33	2.64	.24	.51	.35	0.66	3.7
	E40-3299-2	1/8"	1.97	.87	.24	.33	.35	0.44	1.65
	E40-3004-2	4MM	1.97	.87	.28	.37	.47	0.44	1.65
	E40-3004-3	4MM	2.76	1.65	.28	.45	.47	0.44	2.44
	E40-3004-3L	4MM	3.35	1.65	.28	.45	.47	0.66	2.72
	E40-3004-4	4MM	4.33	2.64	.28	.55	.47	0.66	3.9
E40	E40-3006-2	6MM	1.97	.87	.35	.44	.71	0.44	1.54
	E40-3006-3	6MM	2.76	1.65	.35	.53	.71	0.44	2.13
	E40-3006-3L	6MM	3.35	1.65	.35	.53	.71	0.66	2.72
	E40-3006-4	6MM	4.33	2.64	.35	.63	.71	0.66	3.7
	E40-3008-2	8MM	2.36	.87	.43	.52	.94	0.66	1.93
	E40-3008-3	8MM	3.15	1.65	.43	.61	.94	0.66	2.52
	E40-3008-4	8MM	3.94	1.65	.43	.61	.94	0.66	3.31
	E40-3010-2	10MM	2.36	.87	.51	.60	1.18	0.66	1.93
	E40-3010-3	10MM	3.15	1.65	.51	.69	1.18	0.66	2.52
	E40-3010-4	10MM	3.94	1.65	.51	.69	1.18	0.66	3.5

Note: Use with carbide cutting tools only. Coolant Duct is not furnished.
Note: * means carbide cutting tool shank should be inserted beyond the safety mark for optimum accuracy and rigidity.
Note: Require a cutter shank tolerance of h6: Ø1/8" & Ø3MM - Ø5MM and h7: Ø6MM - Ø10MM, per British Standard Limits of Tolerance for selected shafts: BS4500:1969.
Note: Shrink-fit tool holders are manufactured pursuant to a license from Tooling Innovations Pat. No. 5,311,654; 5,582,494; and 4,818,161.

MST SLIMLINE

HSK SMALL SHANK, SHRINK-FIT CHUCKING SYSTEM
HSK 50E SERIES - REGULAR TYPE

- **GUARANTEED ACCURACIES**
  At Length of 4X DIA. ..... .00012" TIR
- **GROUND CHUCK BODY FOR PERFECT TOOL BALANCE**
- **ADVANCED COOLANT THRU BODY DESIGN**

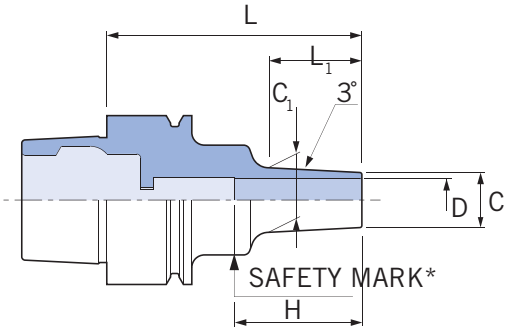

METRIC SIZE

TYPE	ORDER NO.	D	L	L_1	C	C_1	H	WT. (lb.)	MAX INSERT LENGTH
	E50-2003-3	3MM	2.95	.87	.30	.39	.35	1.1	2.56
	E50-2003-4	3MM	3.74	1.65	.30	.47	.35	1.1	3.35
	E50-2003-5	3MM	4.72	2.64	.30	.57	.35	1.32	4.33
	E50-2003-6	3MM	5.91	3.82	.30	.70	.35	1.1	5.2
	E50-2004-3	4MM	2.95	.87	.40	.48	.47	1.1	2.56
	E50-2004-4	4MM	3.74	1.65	.40	.57	.47	1.1	3.35
	E50-2004-5	4MM	4.72	2.64	.40	.67	.47	1.32	4.33
	E50-2004-6	4MM	5.91	3.82	.40	.80	.47	1.54	5.2
E50	E50-2006-2	6MM	2.36	.87	.47	.56	.71	1.1	1.73
	E50-2006-4	6MM	3.74	1.65	.47	.65	.71	1.1	3.03
	E50-2006-5	6MM	4.72	2.64	.47	.75	.71	1.32	4.02
	E50-2008-2	8MM	2.36	.87	.55	.64	.94	1.1	1.73
	E50-2008-4	8MM	3.74	1.65	.55	.72	.94	1.1	3.03
	E50-2010-2	10MM	2.36	.87	.63	.72	1.18	1.1	1.73
	E50-2012-2	12MM	2.36	.87	.79	.88	1.18	1.1	1.73
	E50-2016-2	16MM	2.36	.87	1.02	1.11	1.26	1.32	1.73
	E50-2020-3	20MM	2.56	.87	1.26	1.35	1.50	1.32	1.93

Note: Use with carbide cutting tools only. Coolant Duct is not furnished.
Note: * means carbide cutting tool shank should be inserted beyond the safety mark for optimum accuracy and rigidity.
Note: Require a cutter shank tolerance of h6: Ø3MM - Ø5MM and h7: Ø6MM - Ø20MM, per British Standard Limits of Tolerance for selected shafts: BS4500:1969.
Note: Shrink-fit tool holders are manufactured pursuant to a license from Tooling Innovations Pat. No. 5,311,654; 5,582,494; and 4,818,161.

MST SLIMLINE

HSK SMALL SHANK, SHRINK-FIT CHUCKING SYSTEM

HSK 50E SERIES - SLIM TYPE

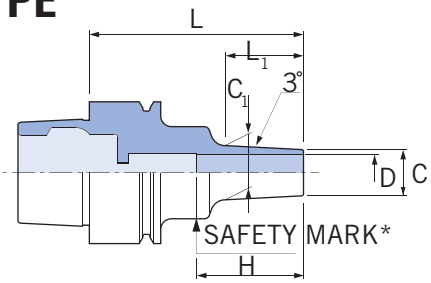

- **GUARANTEED ACCURACIES**
  At Length of 4X DIA. ..... .00012" TIR
- **GROUND CHUCK BODY FOR PERFECT TOOL BALANCE**
- **ADVANCED COOLANT THRU BODY DESIGN**

METRIC SIZE

TYPE	ORDER NO.	D	L	L_1	C	C_1	H	WT. (lb.)	MAX INSERT LENGTH
	E50-3003-2	3mm	2.36	.87	.24	.33	.35	0.88	1.97
	E50-3003-3	3mm	3.15	1.65	.24	.41	.35	1.1	2.76
	E50-3003-4	3mm	3.74	1.65	.24	.41	.35	1.1	3.35
	E50-3004-2	4mm	2.36	.87	.28	.37	.47	0.88	1.97
	E50-3002-3	4mm	3.15	1.65	.28	.45	.47	1.1	2.76
	E50-3004-4	4mm	3.74	1.65	.28	.45	.47	1.1	3.35
	E50-3006-2	6mm	2.36	.87	.35	.44	.71	1.1	1.65
	E50-3006-3	6mm	3.15	1.65	.35	.53	.71	1.1	2.44
	E50-3006-5	6mm	4.72	2.64	.35	.63	.71	1.1	4.02
	E50-3006-6	6mm	5.91	3.82	.35	.76	.71	1.3	5.2
E50	E50-3008-2	8mm	2.56	.87	.43	.52	.94	1.1	1.93
	E50-3008-3	8mm	3.35	1.65	.43	.61	.94	1.1	2.64
	E50-3008-5	8mm	4.72	2.64	.43	.71	.94	1.32	4.02
	E50-3008-6	8mm	5.91	3.82	.43	.83	.94	1.54	5.2
	E50-3010-2	10mm	2.56	.87	.51	.60	1.18	0.66	1.93
	E50-3010-3	10mm	3.35	1.65	.51	.69	1.18	0.66	2.52
	E50-3010-5	10mm	4.72	3.82	.51	.79	1.18	1.32	2.52
	E50-3010-6	10mm	5.91	3.82	.51	.91	1.18	1.54	2.52
	E50-3012-2	12mm	2.56	.87	.59	.68	1.18	1.1	1.93
	E50-3012-3	12mm	3.35	1.65	.59	.76	1.18	1.1	2.52
	E50-3012-5	12mm	4.72	2.64	.59	.87	1.18	1.32	2.52

Note: Use with carbide cutting tools only. Coolant Duct is not furnished.
Note: * means carbide cutting tool shank should be inserted beyond the safety mark for optimum accuracy and rigidity.
Note: Require a cutter shank tolerance of h6: Ø3MM - Ø5MM and h7: Ø6MM - Ø20MM, per British Standard Limits of Tolerance for selected shafts: BS4500:1969.
Note: Shrink-fit tool holders are manufactured pursuant to a license from Tooling Innovations U.S. Pat. No. 5,311,654; 5,582,494; and 4,818,161.

MST SLIMLINE

SHRINK-FIT CHUCKING SYSTEM – SOLID SERIES

MONO SOLID SERIES

- GUARANTEED ACCURACIES
  At Length of 4X DIA. ..... .00012" TIR
- GROUND CHUCK BODY FOR PERFECT TOOL BALANCE
- ADVANCED COOLANT THRU BODY DESIGN
- AVAILABLE FROM 1/8 - 1" & 3 - 25MM WITH VARIETY OF GAGE LENGTH IN REGULAR & SLIM TYPES IN CAT40, CAT50, BT40, HSK63A, AND HSK100A
- 2 SPECIAL ALLOY STEELS AT CHUCKING AREA (HIGH COEFFICIENT OF TERMAL EXPANSION) & TAPER SHANK (HIGH HEAT RESISTANCE) FOR OPTIMUM ACCURACY & RIGIDITY

CURVE SOLID SERIES

- IDEAL FOR 5 AXIS MACHINING
- OPTIMUM RIGIDITY
- MINIMIZES INTERFERENCE
- IDEAL FOR DEEP CAVITY APPLICATION

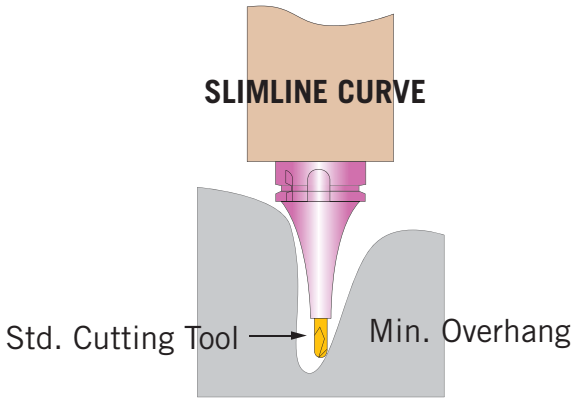

Shrink-fit tool holders are manufactured pursuant to a license from Tooling Innovations U.S. Pat. No. 5,311,654; 5,582,494; and 4,818,161.

MST SLIMLINE

SHRINK-FIT CHUCKING SYSTEM - ACCESSORIES

COLLET STANDS

ORDER NO.	SDK-01

Note: For storing up to 25 adapters.

COLLET TRAYS

ORDER NO.	SDH-01

Note: Aluminum design for high-efficient cooling of cutting tools.

WRENCH FOR TWO-PIECE SLIMLINE

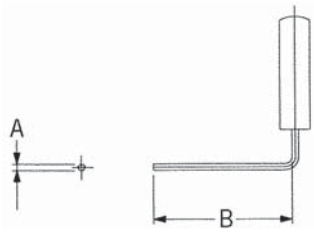

ORDER NO.	W-135

STOPPERS (STANDARD TYPE)

ORDER NO.	SHANK DIA.
HSA-1/8	1/8"
HSA-3/16	3/16"
HSA-1/4	1/4"
HSA-3/8	3/8"
HSA-1/2	1/2"

ORDER NO.	SHANK DIA.
HSA-3	3MM
HSA-4	4MM
HSA-6	6MM
HSA-8	8MM
HSA-10	10MM
HSA-12	12MM
HSA-16	16MM
HSA-20	20MM

STOPPERS (G TYPE)

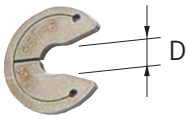

Note: D means shank diameter.

ORDER NO.	D
HSB-1/8	1/8"
HSB-3/16	3/16"
HSB-1/4	1/4"
HSB-3/8	3/8"
HSB-1/2	1/2"

ORDER NO.	D
HSB-3	3MM
HSB-4	4MM
HSB-6	6MM
HSB-8	8MM
HSB-10	10MM
HSB-12	12MM
HSB-16	16MM
HSB-20	20MM
HSB-25	25MM

MST SLIMLINE

SHRINK-FIT CHUCKING SYSTEM - ACCESSORIES

TAPER POT ADAPTERS

BAA-01

ADH-40

ADH-50

ADH-SLK

ORDER NO.	SHANKS
ADH-HSK25	E25
ADH-HSK32	E32
ADH-HSK40	A40/E40
ADH-HSK50	E50/F63
ADH-40	BT40/CT40/A63
ADH-50	CT50
ADH-SLK	SLIMLINE ADAPTER
BAA-01*	POT BASE/A100

Note: ADH-SLK is used with Slimline Adapters.
Note: *means BAA-01 can be used as a base or as an adapter pot as shown.
Note: All ADH adapters need to be mounted on ADH-SLK for use.

SETTING GAGE FOR CUTTER PROJECTION LENGTH

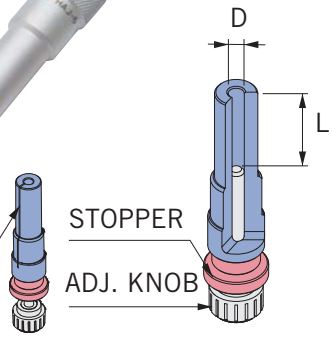

ORDER NO.	D	L
HAJ-3	3MM	.39 - 1.18
HAJ-4	4MM	.51 - 1.18
HAJ-6	6MM	.75 - 1.77
HAJ-8	8MM	.98 - 2.17
HAJ-10	10MM	1.22 - 2.76
HAJ-12	12MM	1.22 - 3.35
HAJ-16	16MM	1.30 - 3.54
HAJ-20	20MM	1.61 - 3.94
HAJ-25	25MM	1.81 - 3.94

Note: Available in metric size cutters.

HOW TO USE SETTING GAGE

When cutting tools have the same dia. as cutting portion and shank portion

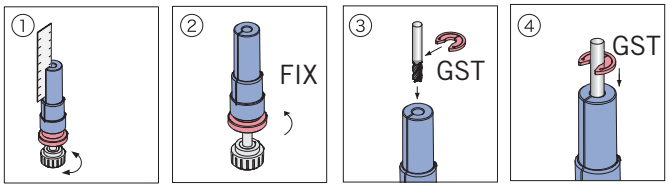

ADJUSTMENT

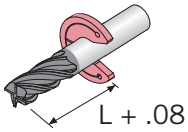

When cutting tools have smaller cutting dia. as the cutting portion and shank portion

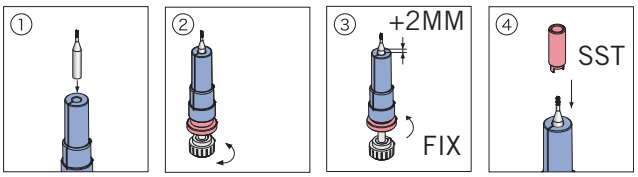

ADJUSTMENT

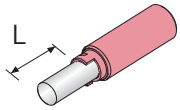

MST SLIMLINE

HOT AIR HEATERS FOR SHRINK-FIT CHUCKING SYSTEM

HEAT ROBO BABY 1500

- **RECOMMENDED FOR 2 PIECE SLIMLINE ADAPTERS AND E25 SERIES SHRINK-FIT TOOL HOLDERS**
- **MOST ECONOMICAL HOT AIR HEATER**
- **AVERAGE HEATING TIME*:**
  2-3 MINUTES FOR CUTTER INSERTION
  3-5 MINUTES FOR CUTTER REMOVAL

1 pair	Heat Resistant Gloves	1 pc	Nozzle
1 pc	Stop Watch	1 pc	Adapter Stand
1 pc	Tweezers	1 pc	Heater Stand Assy

ORDER NO.	POWER CONSUMPTION	DIMENSIONS (in)	WEIGHT (lb.)
HRB-01	AC120V-1500W	13.4 X 6.3 X 16.2	8.5

Note: *Heating time varies depending on size of toolholders and cutting tools.

HEAT ROBO BABY 3000

Photo shown with optional accessories and Slimline Holder.

- **RECOMMENDED FOR ANY SIZE SHRINK-FIT TOOL HOLDERS**
- **POWERFUL 3000 WATTS HEATING GUN**
- **AVERAGE HEATING TIME*:**
  1-2 MINUTES FOR CUTTER INSERTION
  2-3 MINUTES FOR CUTTER REMOVAL

1 pair	Heat Resistant Gloves	1 pc	Nozzle
1 pc	Stop Watch	1 pc	Tweezers
1 pc	Nozzle Cover, HRB-NGA-01	1 pc	Adj. Heater Stand, HRB-LSA-01

ORDER NO.	POWER CONSUMPTION	DIMENSIONS (in)	WT. (lb.)
HRB-03S-230	AC230V-3000W	16.7 X 7.9 X 20.3	11

Note: *Heating time varies depending on size of toolholders and cutting tools.
Note: Optional positioning plate for radial adustment, HRB-PPA-01, is available upon request.

MST CTA/CTH ULTRA-PRECISION COLLET CHUCKS

FOR HIGH SPEED, HIGH FEED-RATE APPLICATIONS

- THE MOST ACCURATE COLLET CHUCKS IN THE INDUSTRY .0002" T.I.R. AT LENGTH OF 4X DIA. FOR P-GRADE COLLET
- CONSTANT BALANCE™ DESIGN FOR HIGH-RPM APPLICATIONS
- ADVANCED THRU BODY COOLANT, PRESSURIZED UP TO 1,000 PSI
- ENGINEERED FOR ULTIMATE RIGIDITY
- IDEAL 6° COLLET TAPER ENSURES SUPERB PERFORMANCE

MST CTA/CTH ULTRA PRECISION COLLET CHUCKS
FOR HIGH-SPEED, HIGH FEED-RATE MACHINING

ENGINEERED FOR MAXIMUM RIGIDITY

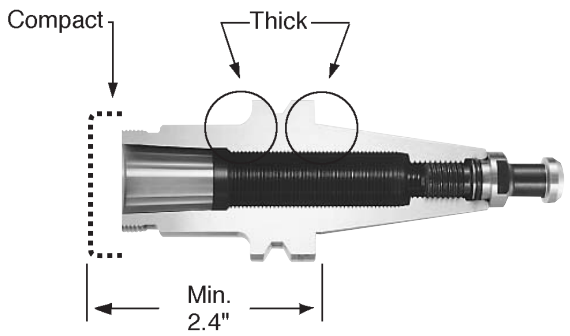

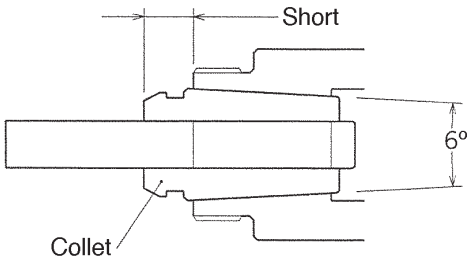

Sturdy MST Collet Chucks provide stable, vibration-free machining and unmatched tool-holding capability...

Collets feature a 6˚ taper angle, which provides tight grip and superior accuracy.

A massive chuck body efficiently dampens and/or absorbs harmonics at high RPM.

MST Collet Chucks are engineered to resist deflection even under severe cutting force.

Note: 6 degree for #116 and #118, and 8 degree for #113.

IDEAL 6˚ TAPER ANGLE FOR SUPERB PERFORMANCE

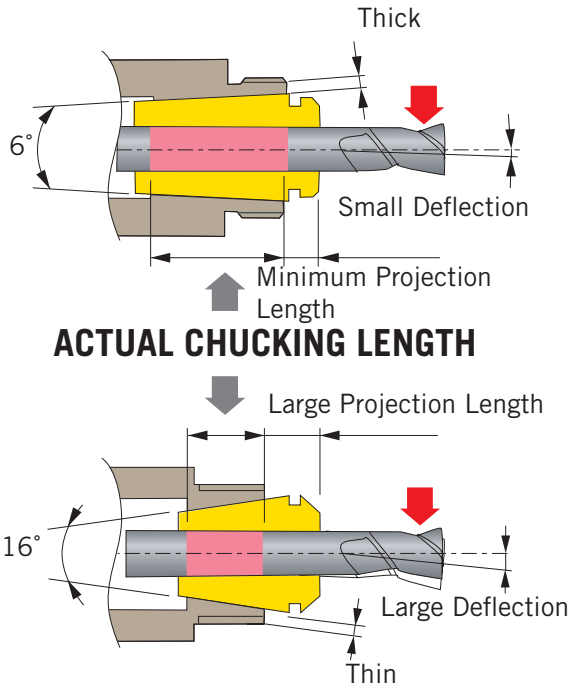

COMPARISON TO 16˚ TAPER COLLETS

A 6˚ taper angle secures a longer chucking length of cutting tools and creates a higher wedge effect, providing a min. deflection of cutting tools.

A 16˚ taper system provides a larger chucking range; however, the cutting force is exerted on the collet nut due to larger collet projection length, resulting in chattering or accidental ejection of cutting tools. With a 6˚ taper angle, the minimum projection length assures optimum cutting performance, because most of cutting forces are on the sturdy CTA/CTH collet chuck body.

MST CTA/CTH ULTRA PRECISION COLLET CHUCKS
FOR HIGH-SPEED, HIGH FEED-RATE MACHINING

ADVANCED DUAL ANGLE CLAMPING SYSTEM

FIG. 1

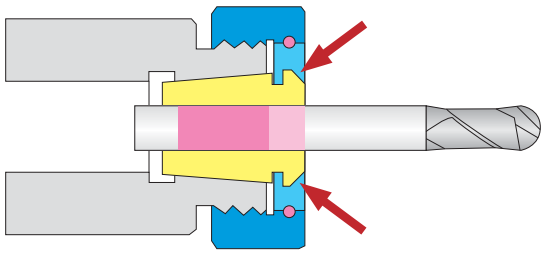

DUAL ANGLE LOCKING SYSTEM
(MST CTA/CTH COLLET CHUCKS)

FIG. 2

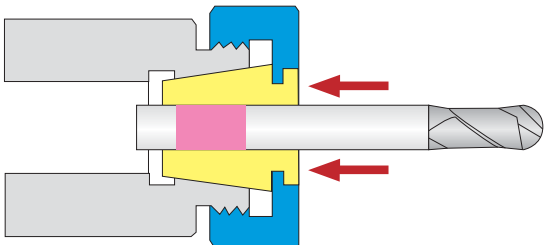

SINGLE ANGLE LOCKING SYSTEM
(OTHER BRAND)

COMPARISON TO SINGLE ANGLE CLAMPING SYSTEM

The internal part of CTA/CTH collet nuts are machined in a single chucking hard-turning process. This process ensures superb concentricity, outstanding surface finish, and maximum gripping force throughout the length of collet, resulting in minimum friction.

In addition, the dual angle clamping system guarantees a secure gripping force at the face of collet nut, where the maximum rigidity is needed in order to perform today's advanced high-speed and high-feed machining.

A single angle clamping system shown in Fig. 2, however, loses significant amount of gripping force at the face of collet nut, where all the cutting tool support is required to maintain rigidity in severe machining process. A lack of gripping force at the face of collet nut also causes larger deflection of cutting tools under severe stress.

MST CTA/CTH ULTRA PRECISION COLLET CHUCKS
FOR HIGH-SPEED, HIGH FEED-RATE MACHINING

ACCURACY

Collets

- **Guaranteed Accuracy .0002" T.I.R.**

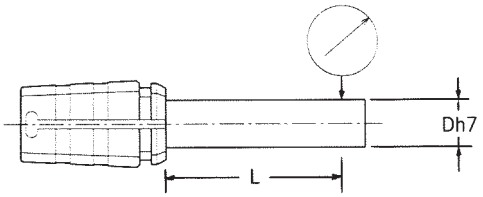

D	L
UP TO .40"	4X D
.40 - .80"	1.6"
.80" AND OVER	2.4"

- **Peripheral Flank Wear**
- **Superior Concentricity Enhances Tool Life**

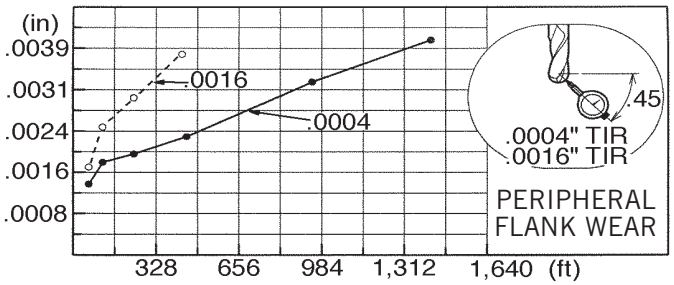

Collet Chuck Nuts

MST CTA/CTH Collet Chuck nuts are machined in a complete, single chucking, hard turning process. This process ensures a superb concentricity and an optimum chucking force with absolutely no collet distortion.

BALANCE

MST Collet Chucks keep their balance.....

MST's Constant Balance™ Chucks eliminate the need for balancing, even when cutters are changed. These CTA Collet Chucks are especially designed for high-speed and high-feed rate applications. Consult with our sales engineers for details as there are certain restrictions, including mass of machine spindle, cutting tools, etc.

First choice for accuracy...

MST CTA/CTH Collet Chucks are built with a high degree of concentricity that extends cutter life up to 300%, depending on RPM and tool length.

Ultra accuracy at high RPM...

At high RPM, accuracy becomes extremely critical. MST Collet Chucks are able to hold end mill concentricity to .0002" TIR (.0004" TIR for a standard grade collet) at the work surface.

MST CTA/CTH ULTRA PRECISION COLLET CHUCKS
FOR HIGH-SPEED AND HIGH FEED-RATE MACHINING

ADVANCED THRU-BODY COOLANT SYSTEM

COOLANT DISTRIBUTION SYSTEMS

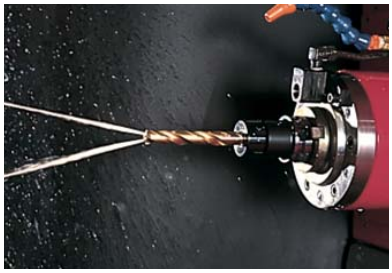
Coolant Thru Cutter

Coolant Around Tool

Coolant Thru Collet

MST offers a variety of thru-body cooling systems. Because high pressure and thru-cutter cooling maximize tool life, the thru-body cooling is the most preferred cooling method for high-speed, high feed-rate machining.
MST offers thru-cutter cooling pressurized up to 1,000 PSI.

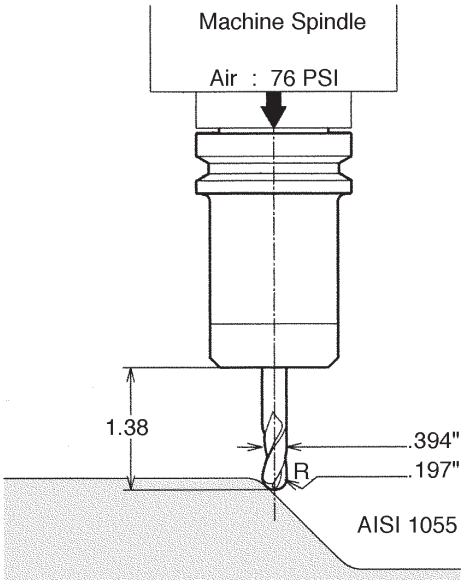

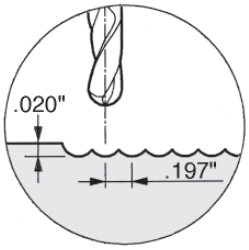

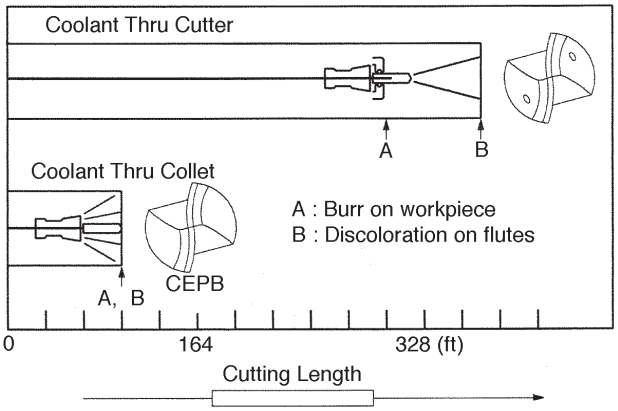

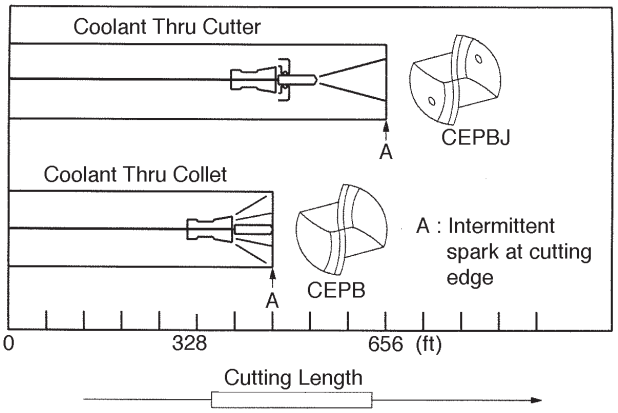

MST CTA ULTRA-PRECISION COLLET CHUCKS

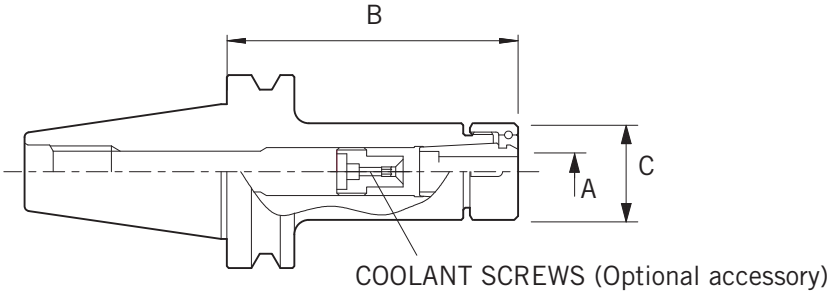

V FLANGE TOOL SHANK

TAPER	ORDER NO.	RANGE A	B	C	APPLICABLE CUTTER SHANK DIA.	COOLANT SCREW
40	140-113-2	.125-.375	2.36	1.42	.16 - .375	0-1402
	140-113-4		3.54			
	140-113-5		4.72			
	140-116-3	.250-.750	2.95	1.97	.39-.75 .24-.47	0-2402 0-2403
	140-116-5	.250-.750	5.31	1.97	.39-.75 .24-.47	0-2402 0-2403
	140-118-3*	.250-1.000	2.95	2.44	.39-.75 .24-.47	0-2402 0-2403
50	150-116-4	.250-.750	4.13	1.97	.39-.75 .24-.47	0-2402 0-2403
	150-116-7	.250-.750	6.50	1.97	.39-.75 .24-.47	0-2402 0-2403
	150-118-4	.250-1.000	4.13	2.44	.39-.75 .24-.47	0-2402 0-2403

Note: Purchase coolant screws (p89), collets (p90), and wrenches (p89) separately.
Note: A coolant screw is an optional accessory and required for the coolant thru cutter.
Note: * means not a standard CAT configuration. Make sure ATC of your machine accepts this configuration.

MST CTA ULTRA-PRECISION COLLET CHUCKS

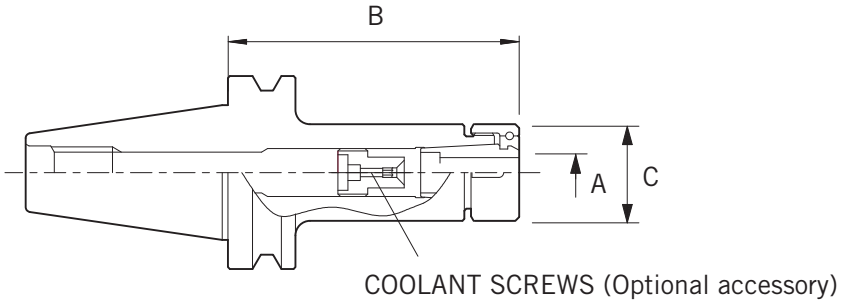

BT FLANGE TOOL SHANK

TAPER	ORDER NO.	RANGE A	B	C	APPLICABLE CUTTER SHANK DIA.	COOLANT SCREW
30	230-113-2	.125 - .375	1.77	1.42	.16 - .375	0-1402
	230-116-2	.250 - .750	2.36	1.97	—	—
40	240-113-2	.125 - .375	2.36	1.42	.16 - .375	0-1402
	240-113-3		3.54			
	240-113-6		5.91			
	240-113-8		8.27			
	240-116-2	.250 - .750	2.36	1.97	.39 - .75 .24 - .47	0-2402 0-2403
	240-116-4		3.54			
	240-116-6		5.91			
	240-116-8		8.27			
	240-118-3	.250 - 1.000	2.95	2.44		
	240-118-4		4.13	2.44	.47 - 1.00	0-2802

Note: Purchase coolant screws (p89), collets (p90), and wrenches (p89) separately.
Note: A coolant screw is an optional accessory and required for the coolant thru cutter.

MST CTH ULTRA-PRECISION COLLET CHUCKS

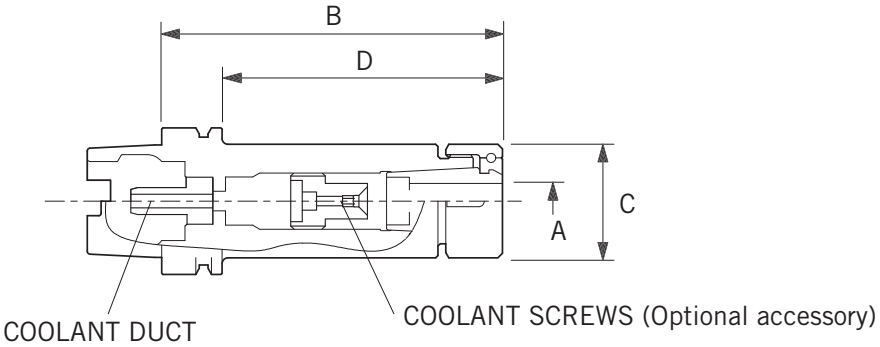

HSK FLANGE TOOL SHANK

TYPE	ORDER NO.	RANGE A	B	C	D	APPLICABLE CUTTER SHANK DIA.	COOLANT SCREW
E32*	032E-113-2	.094 - .375	2.17	1.26	—	—	—
A63	063-113-3	.125-.375	2.95	1.42	1.93	.16-.375	0-1401
	063-113-4		3.54		2.52		0-1402
	063-113-5		4.72		3.70		0-1402
	063-113-6		5.90		4.88		0-1402
	063-116-4	.250-.750	3.54	1.97	2.52	—	—
	063-116-5		4.72		3.70	.24-.47 .39-.75	0-2403 0-2402
	063-116-6		5.90		4.88	.24-.47 .39-.75	0-2403 0-2402
	063-118-4	.250- 1.000	4.13	2.44	3.11	—	—
F63	063F-113-2	.094 - .375	2.36	1.42	1.34	—	—
	063F-113-4	.094 - .375	3.54	1.42	2.52	—	—
	063F-116-3	.228 - .787	2.95	1.97	1.93	—	—
A100	100-113-5	.125-.375	5.31	1.42	4.17	.16 - .375	0-1402
	100-113-7		6.50		5.35		
	100-113-9		8.86		7.72		
	100-116-5	.250-.750	5.31	1.97	4.17	.24 - .47 .39 - .75	0-2403 0-2402
	100-116-7		6.50		5.35		
	100-116-9		8.86		7.72		
	100-118-5	.250-1.000	5.31	2.44	4.17	—	—
	100-118-7		6.50		5.35	.47 - 1.00	0-2802
	100-118-9		7.68		6.54	.47 - 1.00	0-2802

Note: A coolant duct comes with MST CTH Ultra Precision Collet Chuck as a standard accessory for A63 and A100 shanks only.
Note: A coolant screw is an optional accessory and required for the coolant thru cutter.
Note: Purchase collets (p90), coolant screws (p89), and wrenches (p89) separately.
Note: * means collet chuck furnished with a special collet nut.

ACCESSORIES FOR MST CTA/CTH ULTRA-PRECISION COLLET CHUCKS

COOLANT SCREWS

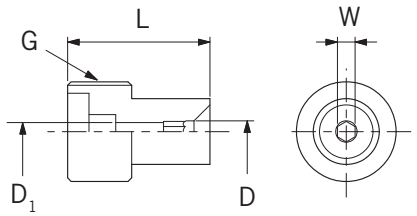

ORDER NO.	L	D	D_1	G	W
0-1401	2.09	.12	.12	M14 X 1.5	3MM
0-1402	1.02	.09	.08	M14 X 1.5	2MM
0-2402	1.18	.28	.24	M24 X 1.5	6MM
0-2403	1.50	.13	.12	M24 X 1.5	3MM
0-2802	1.57	.24	.20	M28 X 1.5	5MM

COLLET NUTS

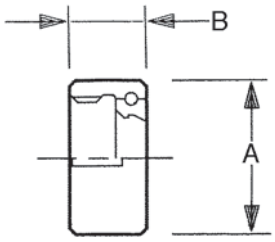

ORDER NO.	CHUCK SIZE	A	B
0-1113A	#113	1.42	.71
0-1113H	#113	1.42	.71
0-1113S	#113	1.26	.71
0-1116A	#116	1.97	.98
0-1116H	#116	1.97	.98
0-1118A	#118	2.44	1.12
0-1118H	#118	2.44	1.12

Note: A means CTA, H means CTH, and S means 032E-113-2.

SUKIMA NUTS

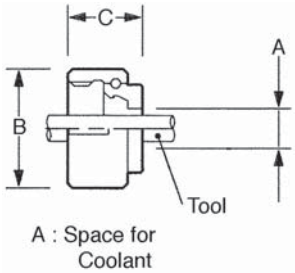

ORDER NO.	TOOL SIZE	A	B	C
2-116-016	1/4	.27	1.97	1.18
2-116-020	5/16	.33		
2-116-024	3/8	.38		
2-116-032	1/2	.51		
2-116-040	5/8	.63		
2-116-048	3/4	.76		
2-118-016	1/4	.27	2.44	1.36
2-118-020	5/16	.33		
2-118-024	3/8	.38		
2-118-032	1/2	.51		
2-118-040	5/8	.63		
2-118-048	3/4	.76		
2-118-064	1	1.01		

WRENCHES

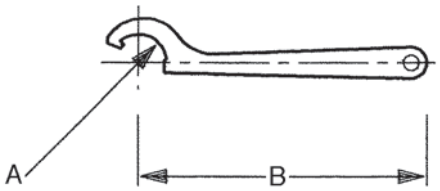

ORDER NO.	CHUCK SIZE	A	B
10113	#113	.71	8.20
10113S	#113	.63	4.72
10116	#116	.98	11.10
10118	#118	1.22	12.30

Note: S means 032E-113-2.

COLLETS FOR MST CTA/CTH ULTRA-PRECISION COLLET CHUCKS

INCH SIZE

COLLET SIZE	ORDER NO.	COLLET CHUCK
1/8	0-113-008	#113
3/16	0-113-012*	
1/4	0-113-016	
5/16	0-113-020*	
3/8	0-113-024	
1/4	0-116-016	#116
5/16	0-116-020*	
3/8	0-116-024	
7/16	0-116-028*	
1/2	0-116-032	
5/8	0-116-040	
3/4	0-116-048	
1/4	0-118-016	#118
5/16	0-118-020*	
3/8	0-118-024	
7/16	0-118-028*	
1/2	0-118-032	
5/8	0-118-040	
3/4	0-118-048	
1	0-118-064	

Note: Collet collapsibility – .008"
Note: * means the size not in stock.
Note: When ordering, specify ORDER NO.

METRIC SIZE

COLLET SIZE	ORDER NO.	COLLET CHUCK
3MM	0-113-3	#113
4MM	0-113-4	
5MM	0-113-5	
6MM	0-113-6	
8MM	0-113-8	
10MM	0-113-10	
6MM	0-116-6	#116
8MM	0-116-8	
10MM	0-116-10	
12MM	0-116-12	
16MM	0-116-16	
20MM	0-116-20	
6MM	0-118-6	#118
8MM	0-118-8	
10MM	0-118-10	
12MM	0-118-12	
16MM	0-118-16	
20MM	0-118-20	
25MM	0-118-25	

Note: The last number in ORDER NO. denotes nominal diameter.
Note: Collet collapsibility is 0.2mm in diameter on all sizes.
Note: Ultra Precision Grade collets are available. Add P at the end of ORDER NO.
Note: When ordering, specify ORDER NO.

MST DETa-1 COLLET CHUCKS

070 AND 120 SERIES

THE ALL-IN-ONE COLLET CHUCKS FOR DRILLING, END MILLING, TAPPING, AND REAMING

PATENTED

- MOST PRECISE COLLET CHUCK - .0002" T.I.R. AT LENGTH OF 4X DIA.
- WIDE COLLAPSE RANGE UP TO .080" PER COLLET.
- INCREASE CARBIDE TOOL LIFE: AN AVERAGE OF 200% TO 300%
- PERFECT SOLUTION TO REAMING PROBLEMS, SUCH AS OVERSIZE, OUT OF ROUND, NOT STRAIGHT, POOR FINISH, ETC.
- DETa-1 CAN PROVIDE COOLANT THRU THE MACHINE SPINDLE, PRESSURISED UP TO 1,000 PSI ON SOME MODELS.

MST DETa-1 COLLET CHUCKS
070 AND 120 SERIES

A TYPE - NUT TIGHTENING

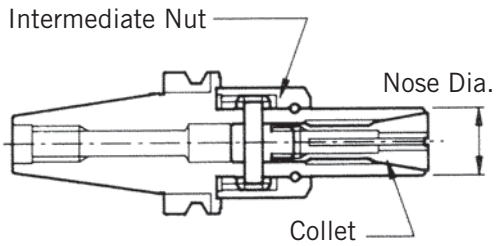

- The collet is tightened with the intermediate nut, which is set back for better clearance.
- Minimum nose diameter:
  - Model A070 .79
  - Model A120 1.18
- Ideal for drilling, reaming, and tapping.

B TYPE AND E TYPE - NUT TIGHTENING

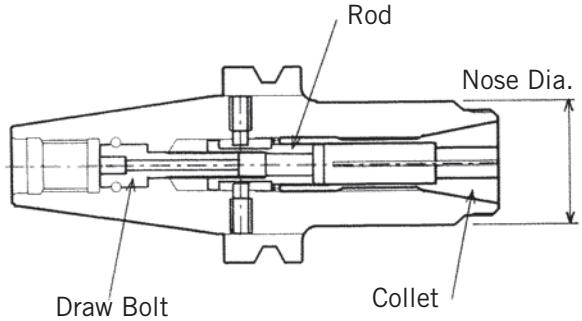

- The collet is tightened with the draw-bolt.
- The nut is eliminated from the nose, benefitting high RPM operation.
- Minimum nose diameter:
  - Model B070 .83
  - Model B120 1.18
  - Model E070 1.14
  - Model E120 1.58
- Ideal for milling with E Type

COLLETS FOR DETa-1 COLLET CHUCKS

CHUCK SIZE	ORDER NO.	RANGE
#070	0-070-015	.039 - .059
	0-070-020	.059 - .079
	0-070-025	.079 - .098
	0-070-030	.098 - .118
	0-070-040	.118 - .157
	0-070-050	.157 - .197
	0-070-060	.197 - .236
	0-070-070	.236 - .276
#120	0-120-040	.098 - .157
	0-120-060	.157 - .236
	0-120-080	.236 - .315
	0-120-100	.315 - .394
	0-120-120	.394 - .472
	0-120-130	.433 - .512

MST DETa-1 COLLET CHUCKS - A TYPE

070 AND 120 SERIES

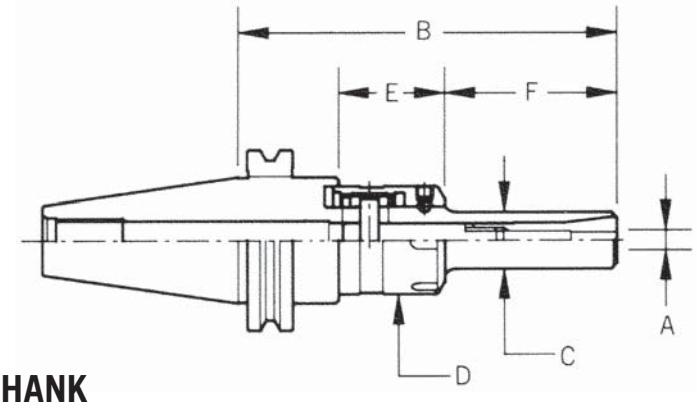

V FLANGE TOOL SHANK

TAPER	ORDER NO.	RANGE A	COLLET	B	C	D	E	F
40	140-A070-4	.039 - .276	#070	4.02	.79	1.50	1.46	1.18
	140-A070-5			5.20				2.36
	140-A120-5	.098 - .512	#120	5.12	1.18	1.77	1.67	2.07
	140-A120-6			6.00				2.95
50	150-A070-4	.039 - .276	#070	4.02	.79	1.50	1.46	1.18
	150-A070-5			5.20				2.36
	150-A070-6			6.00				2.36
	150-A070-8			8.00				2.36
	150-A120-5	.098 - .512	#120	5.12	1.18	1.77	1.57	2.07
	150-A120-6			6.00				2.95
	150-A120-8			8.00				2.95

Note: Purchase wrenches (p156) and collets (p92) separately.

BT FLANGE TOOL SHANK

TAPER	ORDER NO.	RANGE A	COLLET	B	C	D	E	F
30	230-A070-4	.039 - .276	#070	3.54	.79	1.50	1.67	1.18
	230-A070-5			4.72				2.36
	230-A120-5	.098 - .512	#120	4.72	1.18	1.77	1.69	2.07
40	240-A070-4	.039 - .276	#070	4.13	.79	1.50	1.46	1.50
	240-A070-5			5.31				2.36
	240-A120-5	.098 - .512	#120	4.72	1.18	1.77	1.57	2.07
	240-A120-6			5.91				2.95

Note: Purchase wrenches (p156) and collets (p92) separately.

MST DETa-1 COLLET CHUCKS - B TYPE
070 AND 120 SERIES

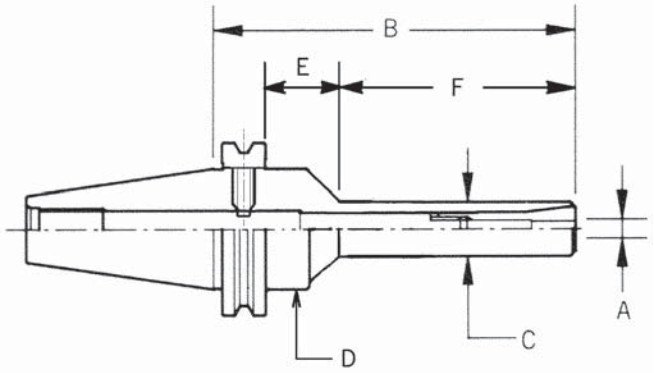

V FLANGE TOOL SHANK

TAPER	ORDER NO.	RANGE A	COLLET	B	C	D	E	F
40	140-B070-4	.039 - .276	#070	4.13	.83	1.75	.63	2.76
	140-B070-5			5.31			1.61	2.95
	140-B120-5	.098 - .512	#120	4.72	1.18	2.75	.63	3.35
	140-B120-6			5.91			1.02	4.13
50	150-B070-5	.039 - .276	#70	5.31	.83	1.75	1.61	2.95
	150-B070-8			7.68			3.97	2.95
	150-B120-5	.098 - .512	#120	5.31	1.18	2.75	.63	3.94
	150-B120-6			6.50			1.61	4.13
	150-B120-8			7.68			2.79	4.13

Note: Purchase collets (p92) and wrenches (p98) separately. The wrench for B070 is W-135 and TW-6 for B120.

BT FLANGE TOOL SHANK

TAPER	ORDER NO.	RANGE A	COLLET	B	C	D	E	F
30	230-B070-3	.039 - .276	#070	2.95	.83	—	—	2.08
	*230-B120-3	.098 - .512	#120	2.95	1.18	—	—	2.08
40	240-B070-4	.039 - .276	#070	4.13	.83	—	—	3.07
	240-B070-5			5.31		1.18	1.30	2.95
	240-B120-5	.098 - .512	#120	4.72	1.18	—	—	3.66
	240-B120-6			5.91		1.57	.71	4.13

Note: Purchase collets (p92) and wrenches (p98) separately. The wrench for B070 is W-135 and TW-6 for B120.

Note: * requires a special retention knob. Specify machine manufacture's name and model number for a quotation.

MST DETa-1 COLLET CHUCKS - A TYPE

070 AND 120 SERIES

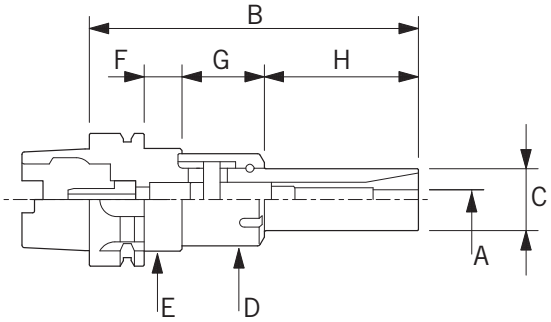

HSK FLANGE TOOL SHANK

TYPE	ORDER NO.	RANGE A	COLLET	B
A63	063-A070-4	.039-.276	#070	4.13
	063-A070-5			4.72
	063-A070-6			5.90
	063-A120-5	.098-.512	#120	4.72
	063-A120-6			5.90
	063-A120-7			7.09
A100	100-A070-5	.039-.276	#070	5.31
	100-A070-7			6.50
	100-A070-9			8.86
	100-A120-5	.098-.512	#120	5.31
	100-A120-7			6.50
	100-A120-9			8.86

TYPE	C	D	E	F	G	H
A63	.83	1.50	1.97	.47	1.46	1.18
				.75		1.50
				1.06		2.36
	1.18	1.77		.04	1.57	2.09
				.35		2.95
				1.54		2.95
A100	.83	1.50		1.54	1.46	1.18
				1.54		2.36
				3.90		2.36
	1.18	1.77		.51	1.57	2.09
				.83		2.95
				3.19		2.95

Note: Purchase wrenches (p156) and collets (p92) separately.
Note: Coolant ducts are furnished for all sizes.

MST DETa-1 COLLET CHUCKS - E TYPE

070 AND 120 SERIES

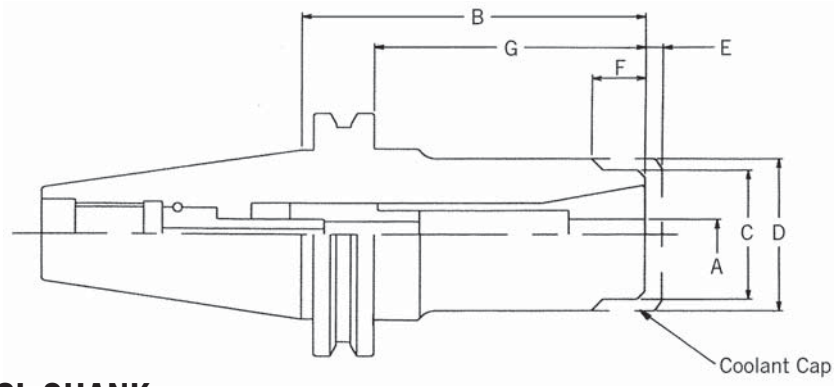

V FLANGE TOOL SHANK

TAPER	ORDER NO.	RANGE A	COLLET	B	C	D	E	F	G
40	140-E070-4	.039-.276	#070	3.54	.94	1.14	.12	.45	2.80
	140-E070-5			4.72					3.98
	140-E120-4	.098-.512	#120	3.54	1.34	1.58	.18	.55	2.80
	140-E120-6			5.91					5.16
50	150-E120-4	.098-.512	#120	4.13	1.34	1.58	.18	.55	3.39
	150-E120-6			6.50					5.75

Note: Purchase wrenches (p98) and collets (p92) separately.
Note: A coolant cap is an optional accessory.

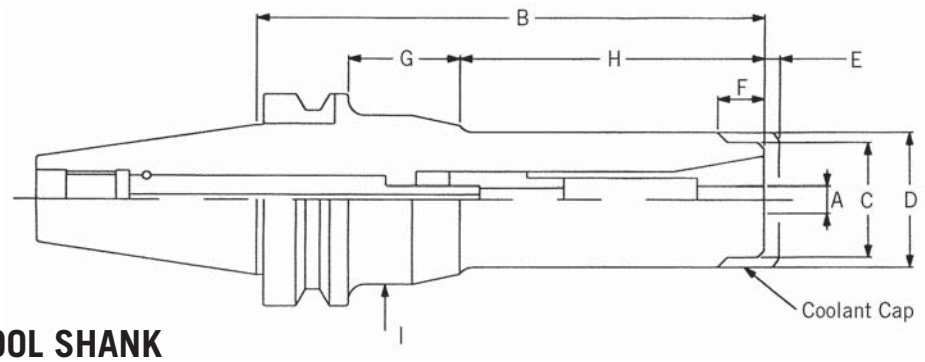

BT FLANGE TOOL SHANK

TAPER	ORDER NO.	RANGE A	COLLET	B	C	D	E	F	G	H	I
40	240-E070-4	.039-.276	#070	3.54	.94	1.14	.12	.45	—	2.48	—
	240-E070-5			4.72					.91	2.76	1.57
	240-E120-4	.098-.512	#120	3.54	1.34	1.58	.18	.55	—	2.48	—
	240-E120-6			5.91						4.84	

Note: Purchase wrenches (p98) and collets (p92) separately.
Note: A coolant cap is an optional accessory.

MST DETa-1 COLLET CHUCKS - E TYPE

070 AND 120 SERIES

FIG. 1

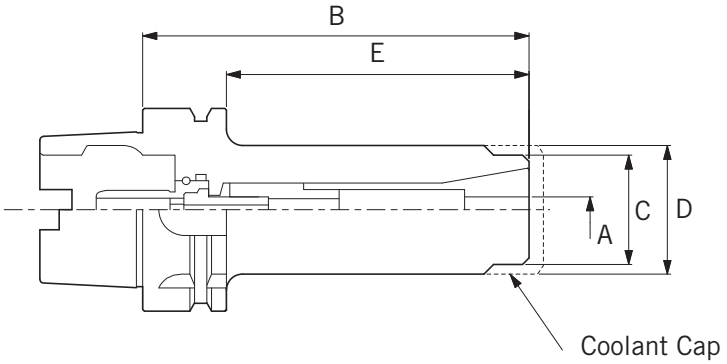

FIG. 2

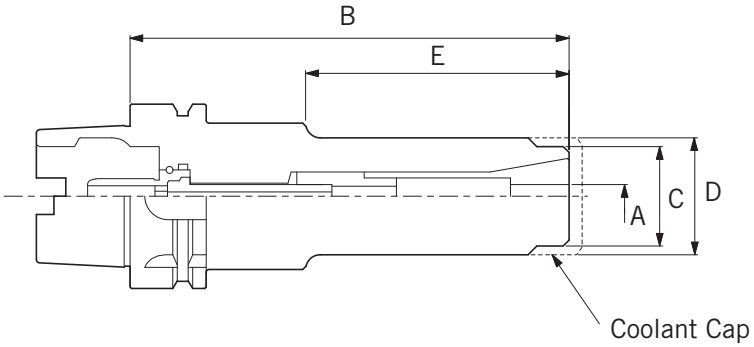

HSK FLANGE TOOL SHANK

TYPE	ORDER NO.	RANGE A	COLLET	B	C	D	E	FIG.
A63	063-E070-4	.039 - .276	#070	4.13	.94	1.14	2.76	2
	063-E070-5			4.72				
	063-E070-6			5.91				
	063-E070-7			7.09				
	063-E120-5	.098 -.512	#120	4.72	1.34	1.57	3.70	1
	063-E120-6			5.91			4.88	
	063-E120-7			7.09			5.51	
A100	100-E070-5	.039 -.276	#070	5.31	.94	1.14	2.76	2
	100-E070-7			6.50				
	100-E070-9			8.86				
	100-E120-5	.098 -.512	#120	5.31	1.34	1.57	4.17	1
	100-E120-7			6.50			5.35	1
	100-E120-9			8.86			5.51	2

Note: Purchase wrenches (p98) and collets (p92) separately.
Note: A coolant cap (p98) is an optional accessory.
Note: Coolant ducts are furnished for all sizes.

OPTIONAL ACCESSORIES FOR MST DETa-1 COLLET CHUCKS

070 AND 120 SERIES - B AND E TYPES

COOLANT CAPS

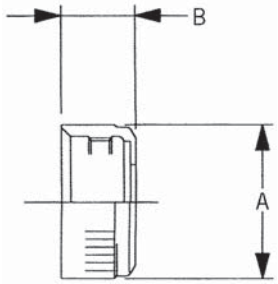

ORDER NO.	A	B	COLLET CHUCK
070-001	1.14	.55	E070
120-001	1.57	.71	E120

Note: A coolant cap comes with O-ring.

SPACERS - COOLANT THRU GROOVE TYPE

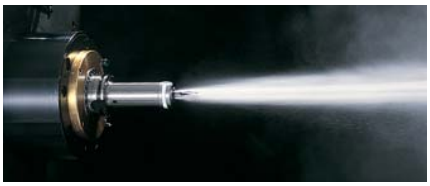

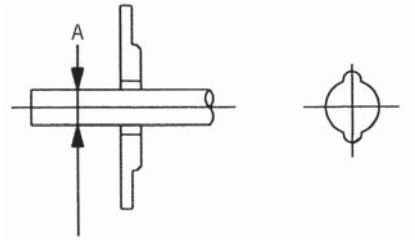

ORDER NO.	A	COLLET CHUCK
070-108	1/8	E070
070-112	3/16	
070-116	1/4	
120-108	1/8	E120
120-112	3/16	
120-116	1/4	
120-120	5/16	
120-124	3/8	
120-132	1/2	

BLANKS

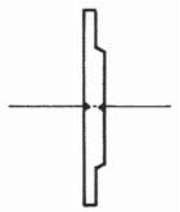

ORDER NO.	COLLET CHUCK
070-100	E070
120-100	E120

WRENCH FOR B TYPE & E TYPE

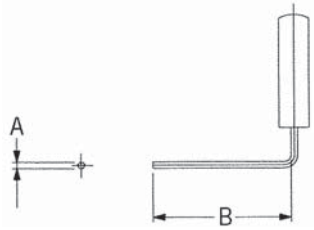

Drawing of W-135

ORDER NO	A	B	CHUCK SIZE
W-135	5mm	4.33	B070, E070, E120
TW-6	6mm	7.88	B120

Note: When tightening or loosening a collet, T-wrench can be directly applied for draw-bolt thru the hole of retension knob. The hole dia. has to be larger than .230 for W-135 and .275 for TW-6.

MST DETa-1 COLLET CHUCKS

030 SERIES

FOR ULTRA-PRECISION MILLING AND DRILLING APPLICATIONS

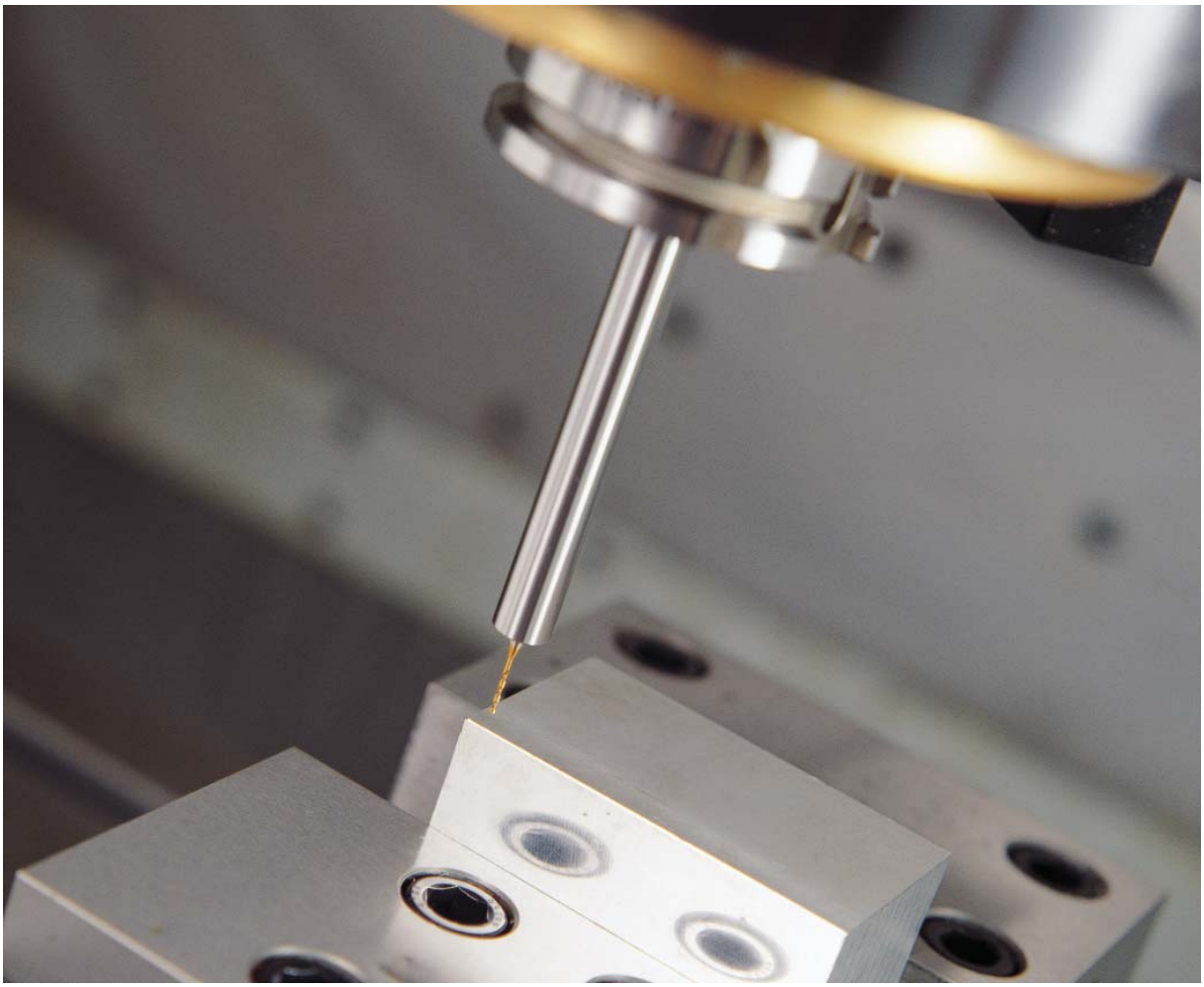

- MOST COMPACT COLLET CHUCKS IN THE INDUSTRY
- MOST PRECISE COLLET CHUCKS - .0002" T.I.R. AT LENGTH OF 4X DIA.
- EXTENDS CARBIDE TOOL LIFE UP TO 300%
- COLLETS ARE MADE OF MARAGING ALLOY STEEL FOR EXTRA DURABILITY.

MST DETa-1 COLLET CHUCKS - A TYPE
030 SERIES

FIG. 1

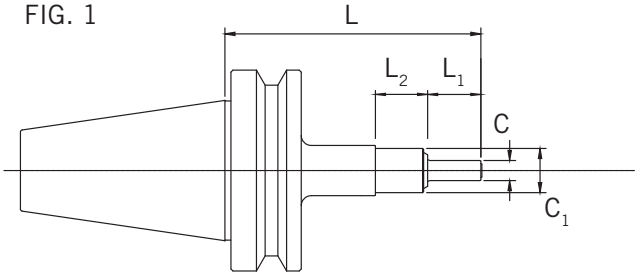

FIG. 2

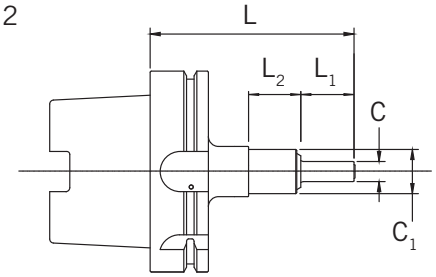

FIG. 3

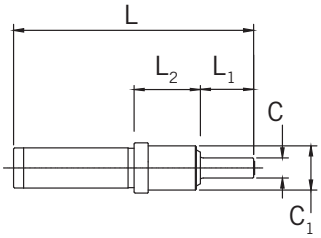

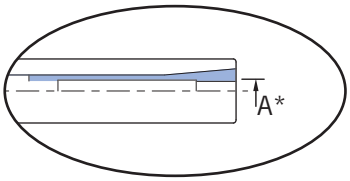

DETAILS OF COLLET CHUCK

TYPE/SHANK	ORDER NO.	L	L1	L2	C	C1	FIG.
BT30	230-A030-4	3.54	1.06	1.02	.39	.87	1
BT40	240-A030-4	3.74					
	240-A030-5	4.92					
CAT40	140-A030-4	3.74					
	140-A030-5	4.92					
A63	063-A030-4	3.54					2
	063-A030-5	4.72					
E32	E32-A030-3	2.95					
E40	E40-A030-3	2.95					
E50	E50-A030-3	3.15					
F63	F63-A030-4	3.54					
	F63-A030-5	4.72					
16mm	816-A030-5	4.72		1.3			3
20mm	820-A030-5	4.72		1.3			3

Note: * means RANGE A is .0197 - .1181
Note: Purchase collets (p102) and optional wrench, F-22 (p102), separately.
Note: Coolant Duct is furnished with A63 models only.

MST DETa-1 COLLET CHUCKS - B TYPE
030 SERIES

FIG. 1

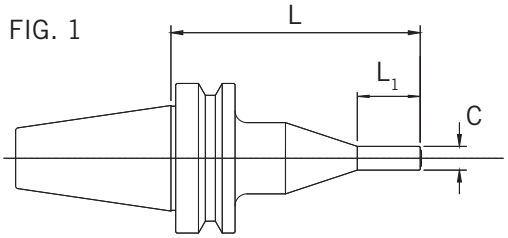

FIG. 2

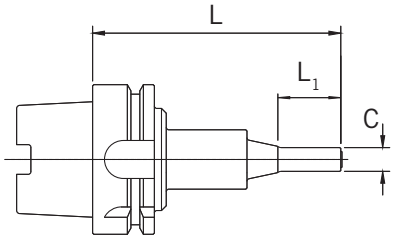

FIG. 3

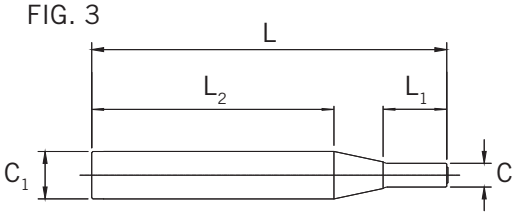

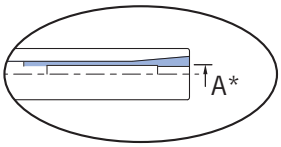

DETAILS OF COLLET CHUCK

TYPE/SHANK	ORDER NO.	L	L1	L2	C	FIG.
BT30	230-B030-4	3.54	1.06	—	.39	1
BT40	240-B030-3	3.15	1.06			
	240-B030-4	4.33	1.06			
	240-B030-4L	4.33	2.24			
CAT40	140-B030-3	3.15	1.06			
	140-B030-4	4.33	1.06			
	140-B030-4L	4.33	2.24			
A63	063-B030-3	2.95	1.06			2
	063-B030-4	4.13	1.06			
	063-B030-4L	4.13	2.24			
E25	E25-B030-3	2.28	1.06			
E32	E32-B030-3	2.56	1.06			
E40	E40-B030-3	2.76	1.06			
E50	E50-B030-3	2.95	1.06			
F63	F63-B030-3	2.95	1.06			
	F63-B030-4	4.13	1.06			
	F63-B030-4L	4.13	2.24			
12mm	812-B030-4	3.54	0.98	2.40		3
16mm	816-B030-5	4.72	1.06	3.21		
20mm	820-B030-6	5.91	1.06	4.02		

Note: * means RANGE A is .197 - .1181.
Note: Purchase collets (p102) and optional 3mm wrench, DW-2.5-110 (p102), separately.
Note: Coolant Duct is furnished with A63 models only.

MST DETa-1 COLLET CHUCKS
030 SERIES

COLLETS

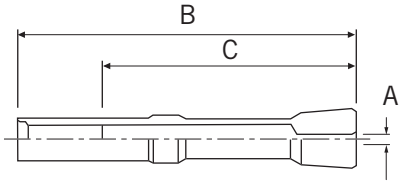

ORDER NO.	RANGE A	B	C
0-030-001	.0197-.0236	1.57	1.18
0-030-002	.0236-.0315		
0-030-003	.0315-.0394		
0-030-004	.0394-.0591		
0-030-005	.0591-.0787		
0-030-006	.0787-.0984		
0-030-007	.0984-.1181		
0-030-008	.1063-.1250		

ROD

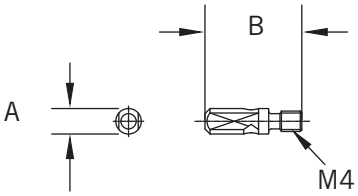

ORDER NO.	A	B
PR-DTA3	.20	.75

WRENCHES

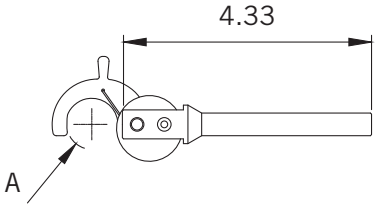

ORDER NO.	A	HOLDER TYPE
F-22	22MM	A Type

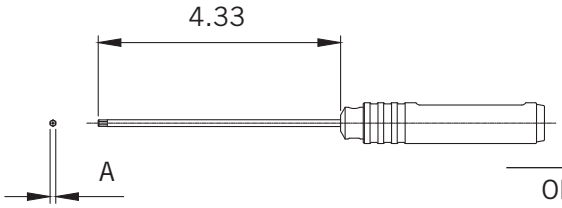

ORDER NO.	A	HOLDER TYPE
DW-2.5-110	2.5MM	B Type

SHELL END MILL ARBORS

- VARIETY OF PROJECTION LENGTH UP TO 15 INCH
- PRECISION GROUND PILOT DIAMETER AND CUTTER MOUNTING FACE
- CONCENTRICITY WITHIN .0002" TIR AT PILOT
- MILLED AND HARDENED DRIVE KEYS
- MADE OF HIGH QUALITY CHROME MOLYBDENUM ALLOY STEEL
- A LIGHT WEIGHT HOLLOW SHANK MODEL WITH ADDED RIGIDITY AVAILABLE UPON REUQEST

V-FLANGE TOOL SHANK
SHELL END MILL ARBORS

FIG. 1

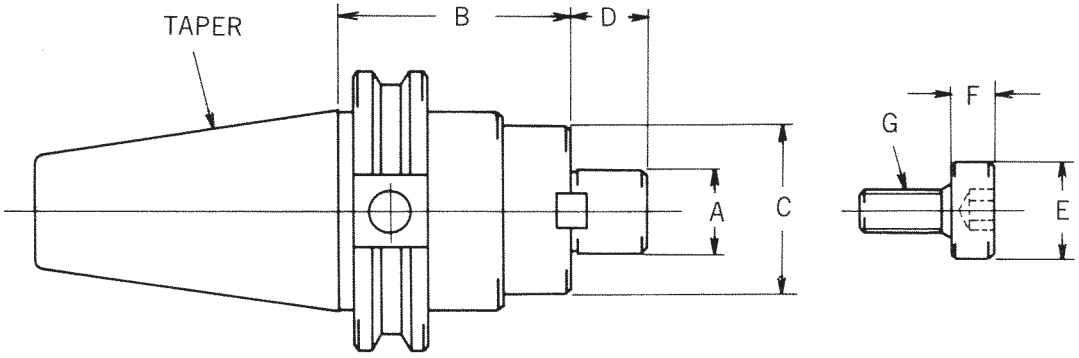

FIG. 2

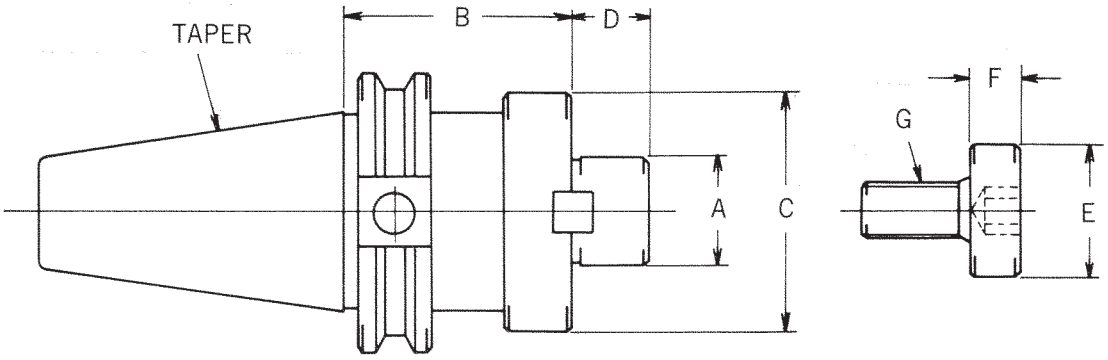

FIG. 3

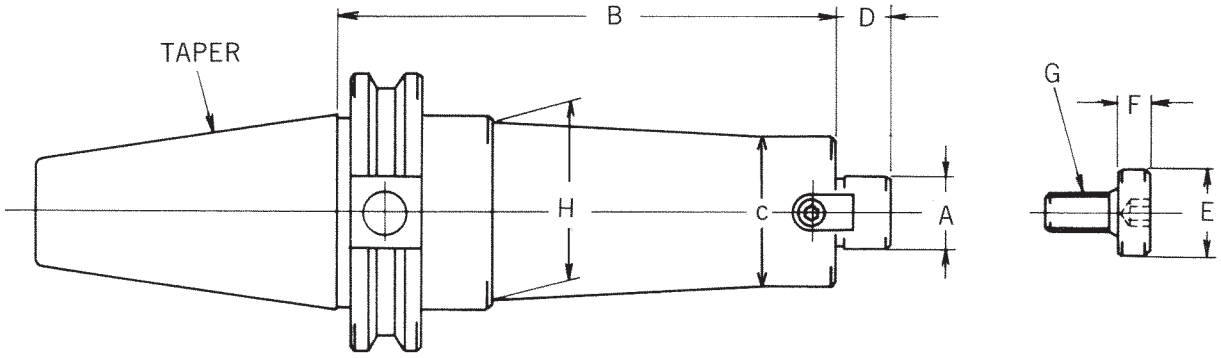

V-FLANGE TOOL SHANK
SHELL END MILL ARBORS

FIG. 4

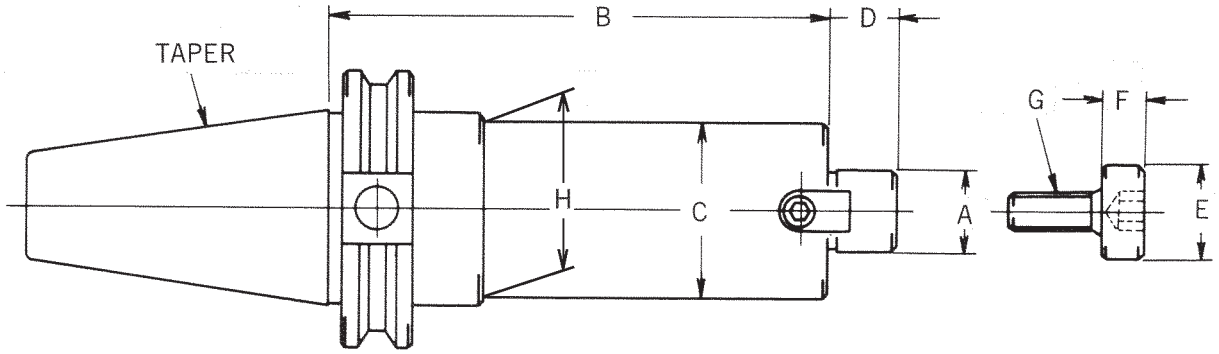

FIG. 5

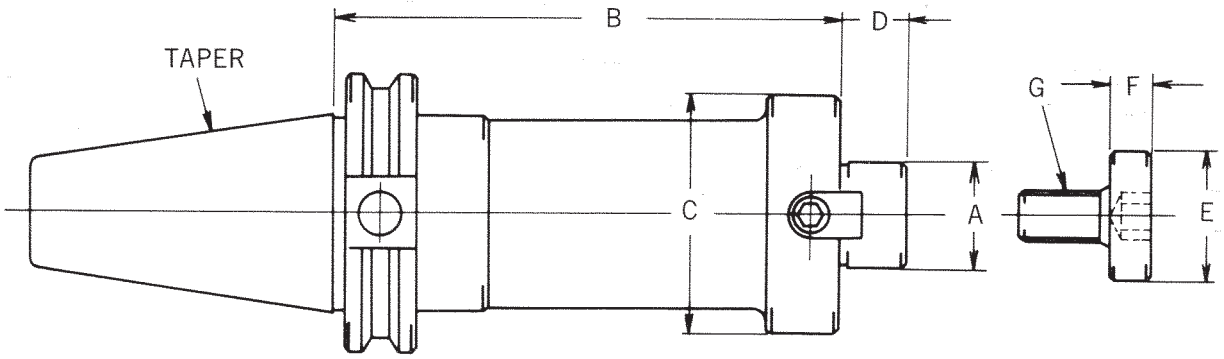

V-FLANGE TOOL SHANK
SHELL END MILL ARBORS

TAPER	ORDER NO.	A	B	C	D	E	F	G	H	FIG.
40	140-206-2	.750	1.75	1.73	.68	.87	.37	3/8-24	—	1
	140-206-4		4.00							1
	140-206-6		6.00							4
	140-208-2	1.000	1.75	2.19	.68	1.18	.37	1/2-20	—	2
	140-208-4		4.00							2
	140-208-6		6.00							5
	140-210-2	1.250	1.75	2.74	.68	1.50	.50	5/8-18	—	2
	140-212-2	1.500	1.85	3.62	.94	1.88	.50	3/4-16	—	2
50	150-206-2	.750	1.75	1.73	.68	.87	.37	3/8-24	—	1
	150-206-4		4.00						—	1
	150-206-6		6.00						—	1
	150-206-8		8.00						2.13	3
	150-206-12		12.00						2.24	3
	150-208-2	1.000	1.75	2.19	.68	1.18	.37	1/2-20	—	1
	150-208-6		6.00						—	1
	150-208-8		8.00						2.13	3
	150-208-12		12.00						2.24	3
	150-210-2	1.250	1.75	2.72	.68	1.50	.50	5/8-18	—	1
	150-210-6		6.00						—	1
	150-210-8		8.00						2.59	4
	150-210-12		12.00						2.70	4
	150-212-2	1.500	2.00	3.86	.94	1.88	.50	3/4-16	—	2
	150-212-6		6.00							2
	150-212-8		8.00							5
	150-212-12		12.00							5

Note: Arbor Screw and Keys furnished. For Drive Key sizes, see p153.

BT-FLANGE TOOL SHANK
SHELL END MILL ARBORS

FIG. 1

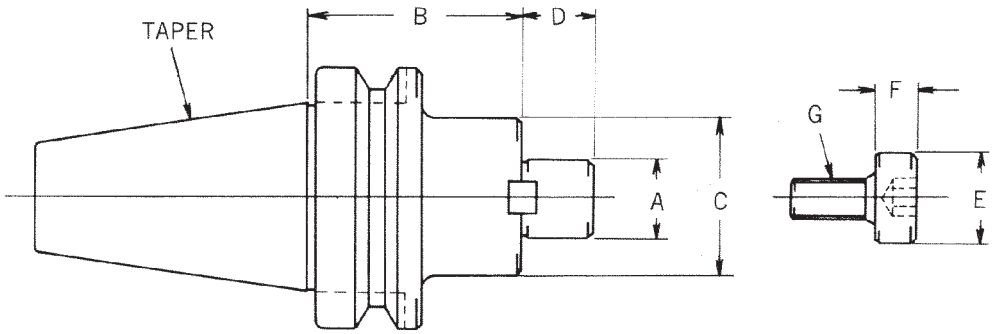

FIG. 2

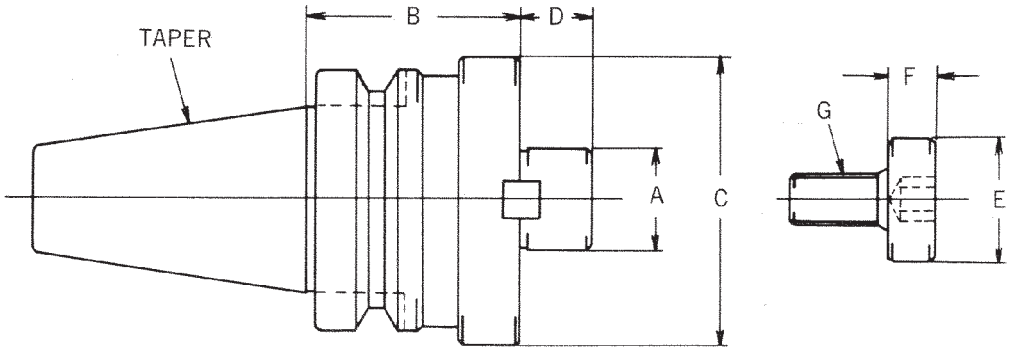

TAPER	ORDER NO.	A	B	C	D	E	F	G	FIG.
30	230-206-2	.750	1.77	1.73	.68	.87	.37	3/8-24	1
	230-208-2	1.000	1.77	2.19	.68	1.18	.37	1/2-20	2
40	240-206-2	.750	1.75	1.73	.68	.87	.37	3/8-24	1
	240-208-2	1.000	1.75	2.19	.68	1.18	.37	1/2-20	1
	240-210-2	1.250	1.75	2.74	.68	1.50	.50	5/8-18	2
	240-212-2	1.500	1.75	3.62	.94	1.88	.50	3/4-16	2

Note: Arbor Screw and Keys furnished.
Note: for Drive Key Sizes, see p153.

END MILL HOLDERS

- VARIETY OF PROJECTION LENGTH UP TO 12 INCH
- PRE-BALANCED SYMMETRICALLY FOR HIGHER RPM UP TO 1"
- ACCEPTS DOUBLE-END END MILLS UP TO 1"
- CONCENTRICITY WITHIN .0002" TIR AT FACE
- HARDENED AND PRECISION GROUND
- MADE OF HIGH QUALITY CHROME MOLYBDENUM ALLOY STEEL

V-FLANGE TOOL SHANK
STUBBY END MILL HOLDERS
PRE-BALANCED SYMMETRICALLY FOR HIGHER R.P.M.

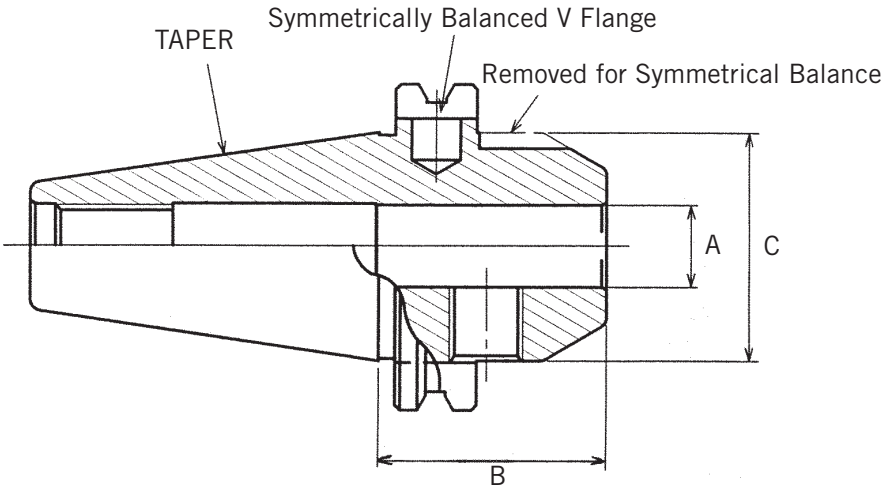

Taper Contact	90%
Taper Tolerance over 12"	.0005"
Surface Roughness	6 Micro Inch
Taper Roundness	.00004" TIR

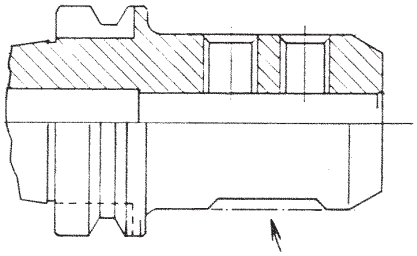

TAPER	ORDER NO.	A	B	C
40	140-306-2**	3/4	1.75	1.75
	140-308-2**	1	1.75	1.75
	140-310-2*	1-1/4	2.00	2.25

Note: Accepts single-end end mills only.
Note: Best balance is obtained with Weldon® shank end mills.
Note: * means not a standard CAT configuration. Make sure ATC of your machine accepts this configuration.
Note: ** means pre-balanced symmetrically.
Note: See p154 for set screws.

V-FLANGE TOOL SHANK
END MILL HOLDERS
PRE-BALANCED SYMMETRICALLY FOR HIGHER R.P.M.

FIG. 1

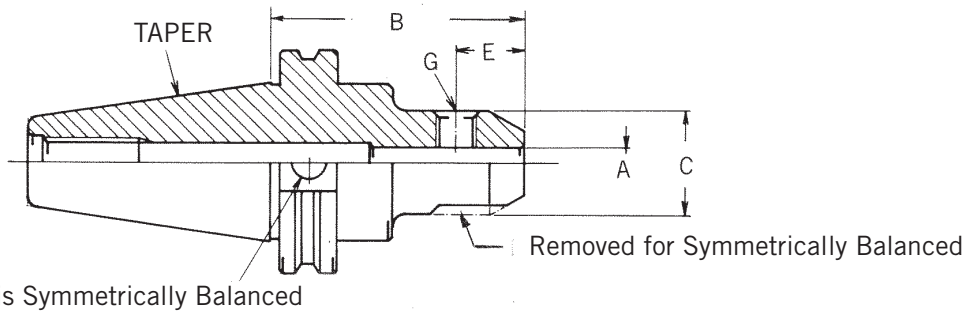

FIG. 2

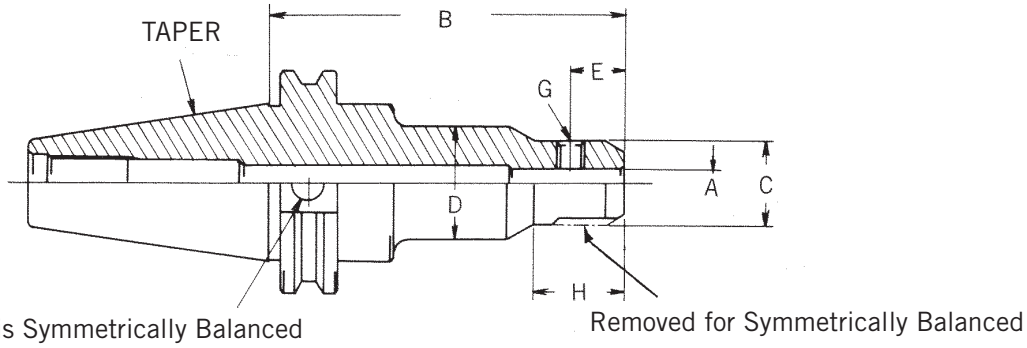

FIG. 3

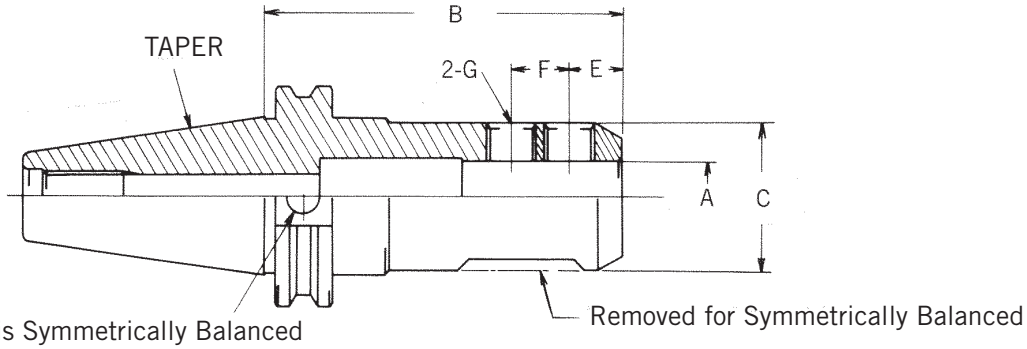

FIG. 4

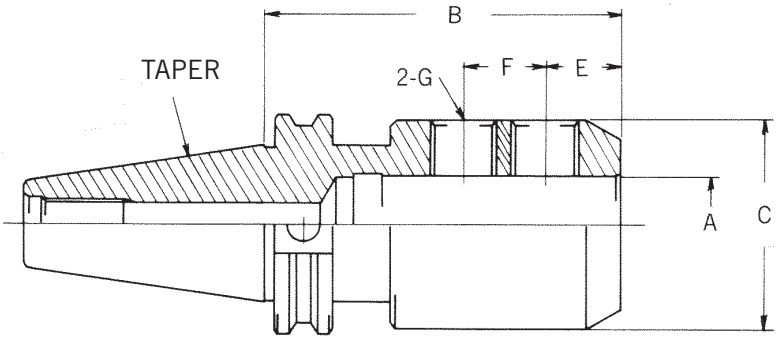

V-FLANGE TOOL SHANK

END MILL HOLDERS

PRE-BALANCED SYMMETRICALLY FOR HIGHER R.P.M.

FIG. 5

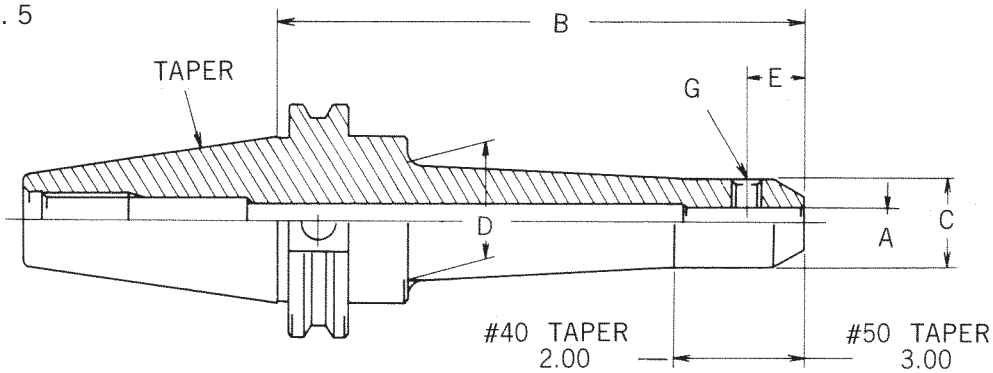

FIG. 6

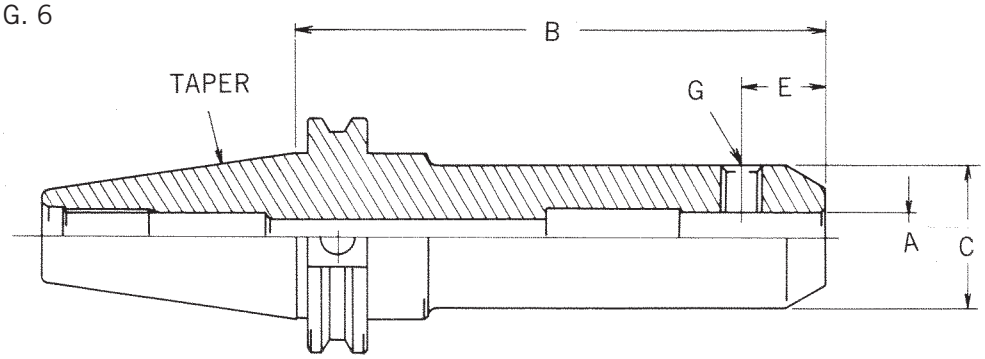

FIG. 7

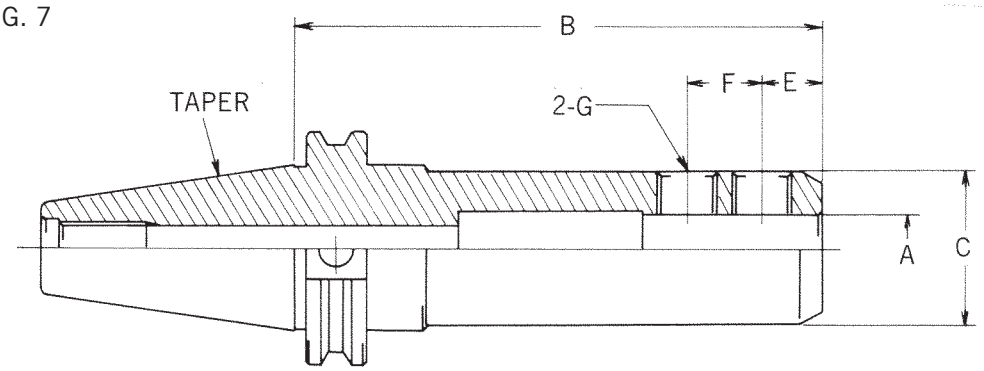

V-FLANGE TOOL SHANK
END MILL HOLDERS
PRE-BALANCED SYMMETRICALLY FOR HIGHER R.P.M.

TAPER	ORDER NO.	A	B	C	D	E	F	G	H	FIG.
	140-299-3*		2.50		—				—	1
	140-299-4*	.125	4.00	.78	1.18	.47	—	#10-24	.91	2
	140-299-6		6.00		1.15				—	5
	140-300-3*		2.50		—				—	1
	140-300-4*	.1875	4.00	.78	1.18	.51	—	1/4-20	.91	2
	140-300-6		6.00		1.15				—	5
	140-301-3*		2.50		—				—	1
	140-301-4*	.250	4.00	.78	1.18	.59	—	1/4-20	.98	2
	140-301-6		6.00		1.15				—	5
	140-302-3*		2.50	.78	—				—	1
	140-302-4*	.3125	4.00	.78	1.18	.59	—	5/16-18	.91	2
	140-302-6		6.00	.94	1.22				—	5
	140-303-3*		2.50		—					1
40	140-303-4*	.375	4.00	1.14	—	.75	—	3/8-16	—	1
	140-303-6		6.00		1.33					5
	140-304-3*		2.50							1
	140-304-4*	.500	4.00	1.50	—	.87	—	7/16-14	—	1
	140-304-6		6.00							6
	140-305-3*		2.50							1
	140-305-4*	.625	4.00	1.65	—	.94	—	9/16-12	—	1
	140-305-6		6.00							6
	140-306-3*		2.75							1
	140-306-4*	.750	4.00	1.75	—	1.00	—	5/8-11	—	1
	140-306-6		6.00							6
	140-308-4*	1.000	3.66	2.36	—	.83	.91	3/4-10	—	3
	140-308-6		6.00							3
	140-310-4	1.250	4.00	2.48	—	.83	.91	3/4-10	—	4

Note: * means pre-balanced symmetrically.
Note: Best balance is obtained with Weldon® shank end mills.
Note: Accepts double-end mills up to 1".

V-FLANGE TOOL SHANK

END MILL HOLDERS

PRE-BALANCED SYMMETRICALLY FOR HIGHER R.P.M.

TAPER	ORDER NO.	A	B	C	D	E	F	G	H	FIG.
50	150-303-3*	.375	3.00	1.14	—	.75	—	3/8-16	—	1
	150-303-6*		6.00		—					1
	150-303-8		8.00		—					1
	150-303-15		15.00		1.88					5
	150-304-3*	.500	3.00	1.50	—	.87	—	7/16-14	—	1
	150-304-6*		6.00		—					1
	150-304-8		8.00		—					1
	150-304-15		15.00		2.24					5
	150-305-3*	.625	3.00	1.65	—	.93	—	9/16-12	—	1
	150-305-6*		6.00		—					1
	150-306-3*	.750	3.00	1.75	—	1.00	—	5/8-11	—	1
	150-306-6*		6.00		—					1
	150-306-8		8.00		—					1
	150-306-12		11.80		2.27					5
	150-308-4*	1.000	4.00	2.36	—	.83	.91	3/4-10	—	3
	150-308-6		6.00							3
	150-308-8		8.00							3
	150-308-12		11.80							7
	150-310-4	1.250	4.00	2.68	—	.83	.91	3/4-10	—	4
	150-310-6		6.00							4
	150-312-4	1.500	4.00	2.87	—	.87	1.06	3/4-10	—	4
	150-316-5	2.000	5.00	3.62	—	.91	1.54	1-14	—	4

Note: * means pre-balanced symmetrically.
Note: Best balance is obtained with Weldon® shank end mills.
Note: Accepts double-end mills up to 1".

BT-FLANGE TOOL SHANK
END MILL HOLDERS
PRE-BALANCED SYMMETRICALLY FOR HIGHER R.P.M.

FIG. 1

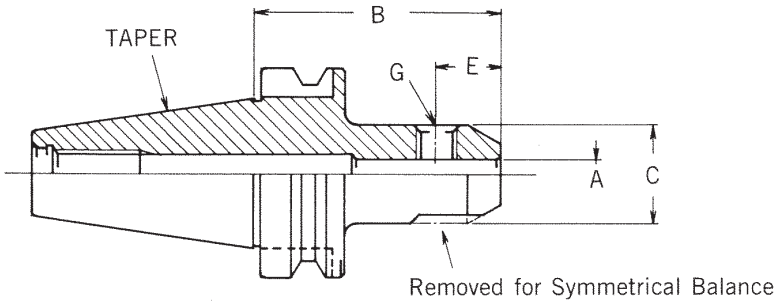

FIG. 2

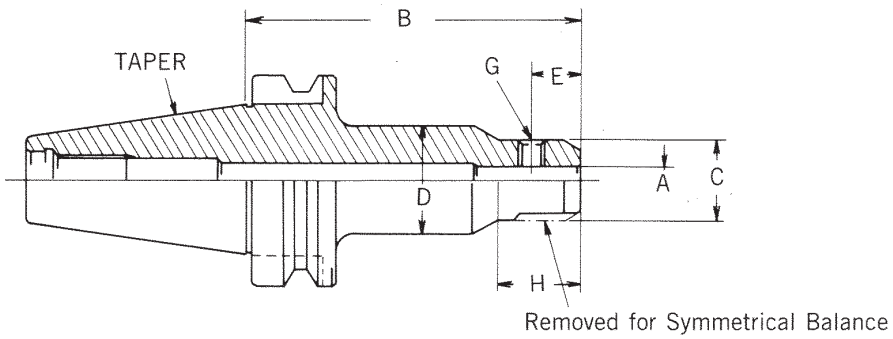

FIG. 3

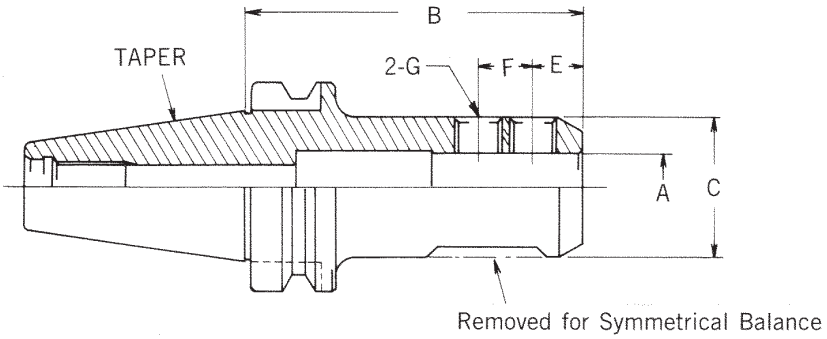

FIG. 4

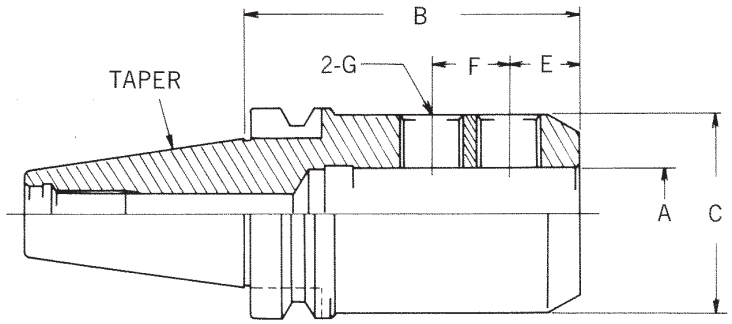

BT-FLANGE TOOL SHANK
END MILL HOLDERS
PRE-BALANCED SYMMETRICALLY FOR HIGHER R.P.M.

TAPER	ORDER NO.	A	B	C	D	E	F	G	H	FIG.
30	230-299-2*	.125	2.36	.78	—	.47	—	#10-24	—	1
	230-300-2*	.1875	2.36	.78	—	.51	—	1/4-20	—	
	230-301-2*	.250	2.36	.78	—	.59	—	1/4-20	—	
	230-302-2*	.3125	2.36	.78	—	.59	—	5/16-18	—	
	230-303-2*	.375	2.36	1.14	—	.75	—	3/8-16	—	
	230-304-2*	.500	2.36	1.50	—	.87	—	7/16-14	—	
	230-305-2*	.625	2.36	1.65	—	.94	—	9/16-12	—	
	230-306-2*	.750	2.36	1.75	—	1.00	—	5/8-11	—	
40	240-299-3*	.125	2.50	.78	1.18	.47	—	#10-24	.91	2
	240-299-4*		4.00							2
	240-300-3*	.1875	2.50	.78	1.18	.51	—	1/4-20	.91	2
	240-300-4*		4.00							2
	240-301-3*	.250	2.50	.78	1.18	.59	—	1/4-20	.91	2
	240-301-4*		4.00							2
	240-302-3*	.3125	2.50	.78	1.18	.59	—	5/16-18	.91	2
	240-302-4*		4.00							2
	240-303-3*	.375	2.50	1.14	—	.75	—	3/8-16	—	1
	240-303-4*		4.00							1
	240-304-3*	.500	2.50	1.50	—	.87	—	7/16-14	—	1
	240-304-4*		4.00							1
	240-305-3*	.625	2.50	1.65	—	.93	—	9/16-12	—	1
	240-305-4*		4.00							1
	240-306-3*	.750	2.50	1.75	—	1.00	—	5/8-11	—	1
	240-306-4*		4.00							1
	240-308-4*	1.000	3.50	2.36	—	.83	.91	3/4-10	—	3
	240-310-4	1.250	3.50	2.48	—	.83	.91	3/4-10	—	4

Note: * means pre-balanced symmetrically.
Note: The best balance is obtained with Weldon® shank end mills.
Note: Accepts double-end end mills up to 1".

STRAIGHT SHANK END MILL HOLDER EXTENSIONS

WITHOUT FLAT

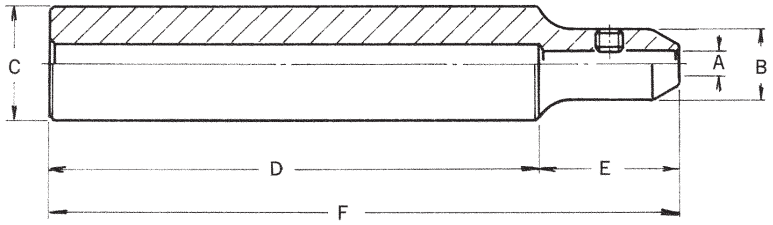

ORDER NO.	A	B	C	D	E	F
706-299-6	.125	.50	.750	5	1	6
706-300-6	.1875	.56	.750	5	1	6
706-301-6	.250	.75	.750	—	—	6
706-302-6	.3125	.75	.750	—	—	6
708-303-6A	.375	1.00	1.00	—	—	6

Note: Straight shank provided without flat.
Note: See p154 for set screws.

MILLMAX MILLING CHUCKS

- **CHUCKING FORCE**
  A combination of increased number of needle rollers and 6 tapered grooves inside of the chuck body exerts 2,500 ft-lb. chucking force.

- **RIGIDITY**
  Engagement of nose piece with chuck body creates uni-body structure and increases rigidity tremendously.

- **ACCURACY**
  Guaranteed within .0004"

- **LIFE**
  High quality material - nickel chrome molybdenum steel, hardend and sub-zero treatment guarantees long life.

MILLMAX MILLING CHUCKS

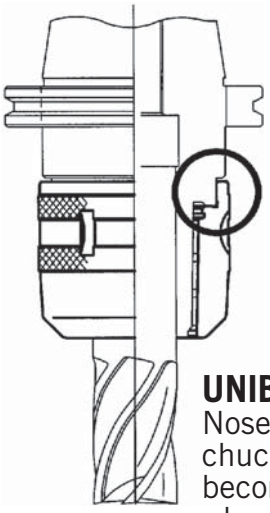

Taper Contact	90%
Taper Tolerance over 12"	.0005"
Surface Roughness	6 Micro Inch
Taper Roundness	.00004" TIR

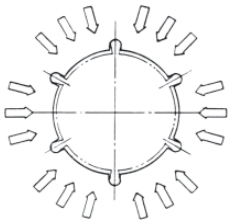

6 TAPERED GROOVES

They enhance better shrinkage of the bore and also increases the friction resistance in chucking by eliminating the effect of oil film on the tool shank.

UNIBODY STRUCTURE

Nose piece engages with chuck body solidly and becomes a part of the body when it is tightened.
The uni-body structure not only increases the rigidity dramatically against the bending motion, but also eliminates the vibration during milling operation.

COMPLETELY SEALED MECHANISM

Specifically designed seals keep the inside mechanism completely free from coolant, dirt, chips, etc. and enables continuous maintenance free operation.

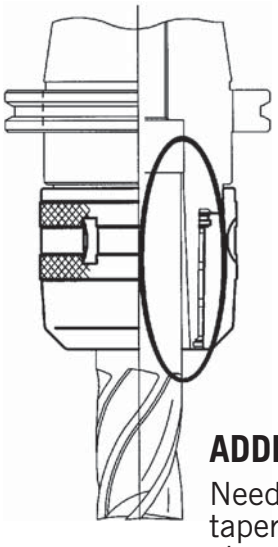

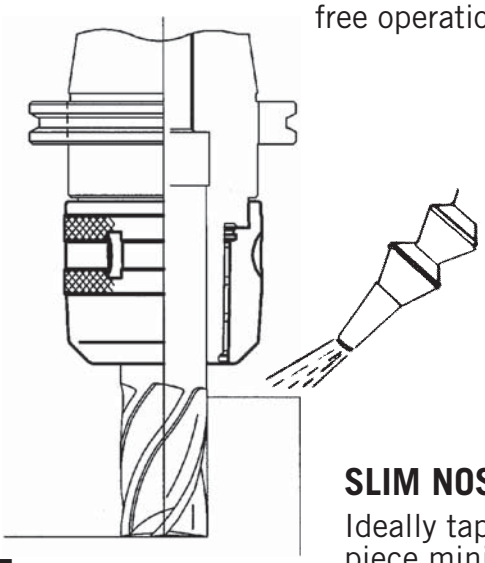

ADDED CHUCKING FORCE

Needle roller with 6 tapered grooves in the chuck body exert far greater chucking force over the entire chucking length, especially increasing its force at the bore.

SLIM NOSE

Ideally tapered nose piece minimizes work-piece interference and provides ample space for chip clearance. The surface is precision ground for vibration free rotation.

MILLMAX MILLING CHUCKS

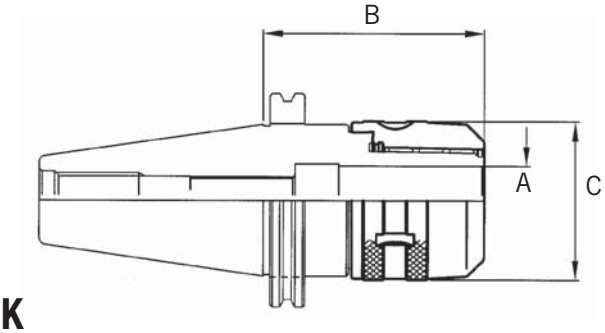

V FLANGE TOOL SHANK

TAPER	ORDER NO.	RANGE A	COLLET	B	C
40	140-106-4	3/16-3/4	#106	4.00	2.00
	140-110-4	3/16-1-1/4	#110	4.25	2.87
50	150-106-4	3/16-3/4	#106	4.00	2.00
	150-110-4	3/16-1-1/4	#110	4.00	2.87

BT FLANGE TOOL SHANK

TAPER	ORDER NO.	RANGE A	COLLET	B	C
40	240-106-4	3/16-3/4	#106	3.63	2.00
	240-110-4	3/16-1-1/4	#110	4.00	2.87

STRAIGHT END MILL COLLETS

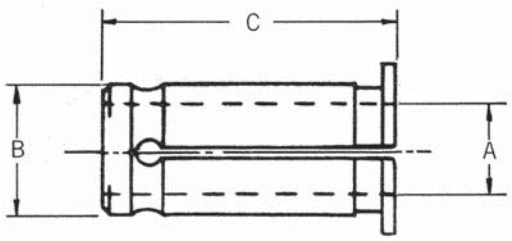

Note: Purchase wrenches (p156) separately.

ORDER NO.	COLLET	A	B	C
0-106-000	#106	3/16	.750	2.00
0-106-001		1/4		
0-106-002		5/16		
0-106-003		3/8		
0-106-004		1/2		
0-106-005		5/8		
0-110-000	#110	3/16	1.250	2.56
0-110-001		1/4		
0-110-002		5/16		
0-110-003		3/8		
0-110-004		1/2		
0-110-005		5/8		
0-110-006		3/4		
0-110-007		7/8		
0-110-008		1		

ER HIGH PRECISION MICRO MILLING CHUCKS

PRE-BALANCED FOR HIGHER R.P.M.

- PRE-BALANCED SYMMETRICALLY FOR HIGHER R.P.M.
- GUARANTEED ACCURACY WITHIN .00015" AT FACE
- GROUND CHUCK BODY FOR PERFECT TOOL BALANCE
- COOLANT THRU BODY UP TO 1500 PSI
- MADE OF HIGH QUALITY CHROME MOLYBDENUM ALLOY STEEL

V FLANGE TOOL SHANK

ER HIGH PRECISION MICRO MILLING CHUCKS

PRE-BALANCED FOR HIGHER R.P.M.

- **GUARANTEED ACCURACIES**
  Face of Chuck: .00015" TIR
  At Length of 4X Dia.: .00040" TIR
- **COOLANT-THRU BODY**
  Up to 1,500 PSI with coolant disc and coolant nuts
- **GROUND CHUCK BODY FOR PERFECT TOOL BALANCE**

Taper Contact	90%
Taper Tolerance over 12"	.0005"
Surface Roughness	6 Micro Inch
Taper Roundness	.00004" TIR

Note: V Flange is symmetrically balanced.

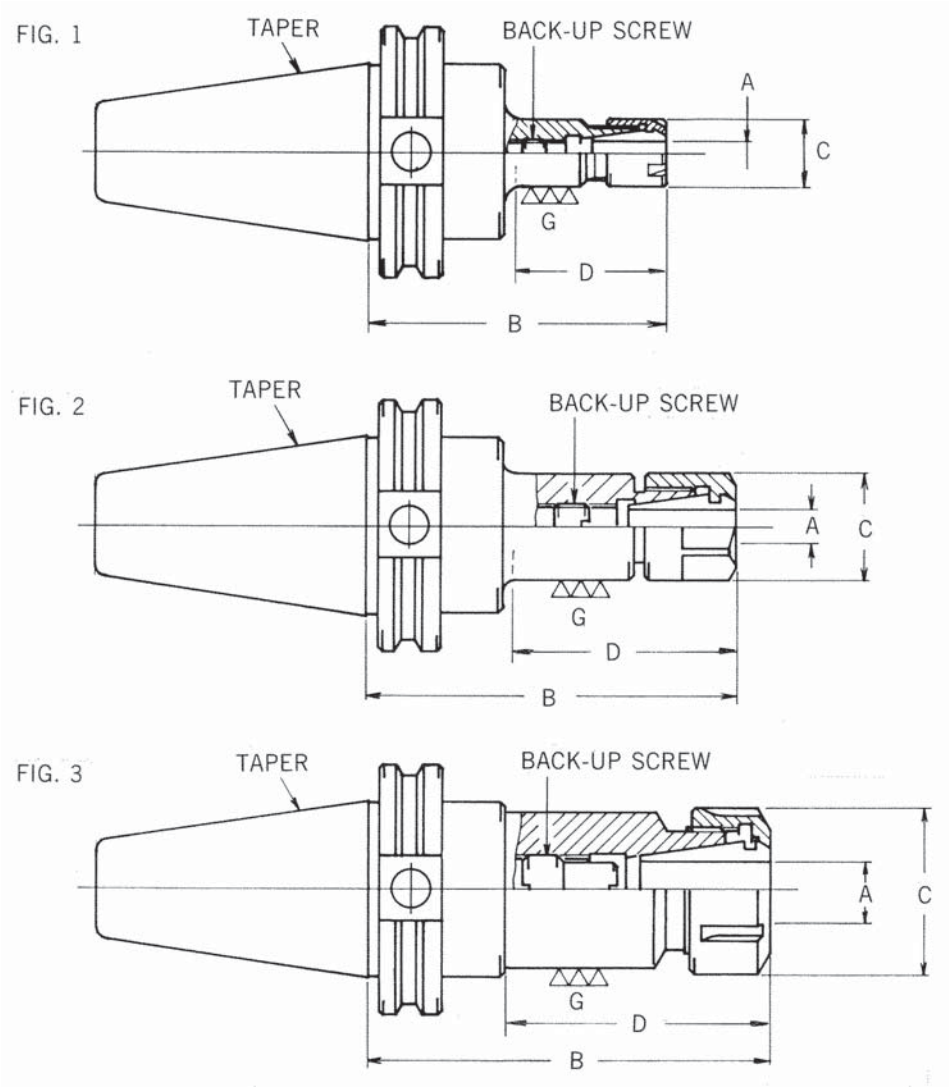

V FLANGE TOOL SHANK

ER HIGH PRECISION MICRO MILLING CHUCKS

PRE-BALANCED FOR HIGHER R.P.M.

FIG. 4

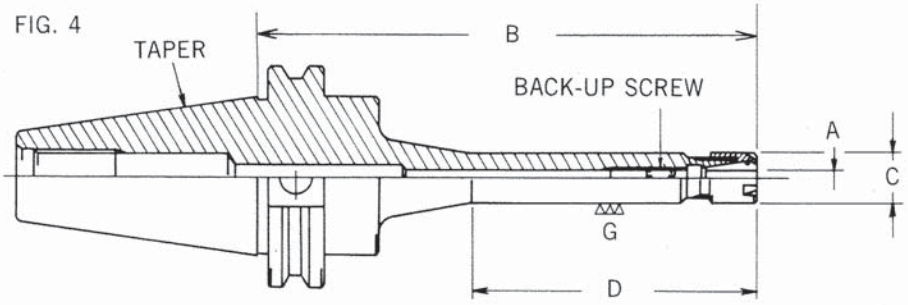

FIG. 5

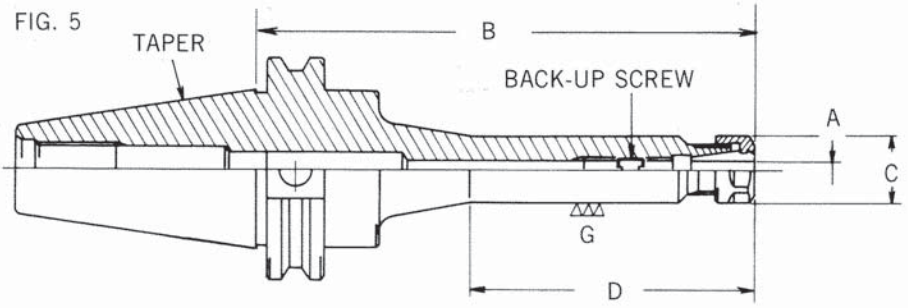

FIG. 6

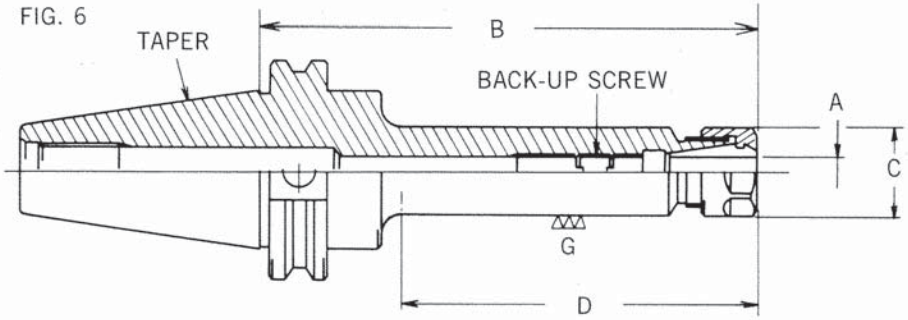

FIG. 7

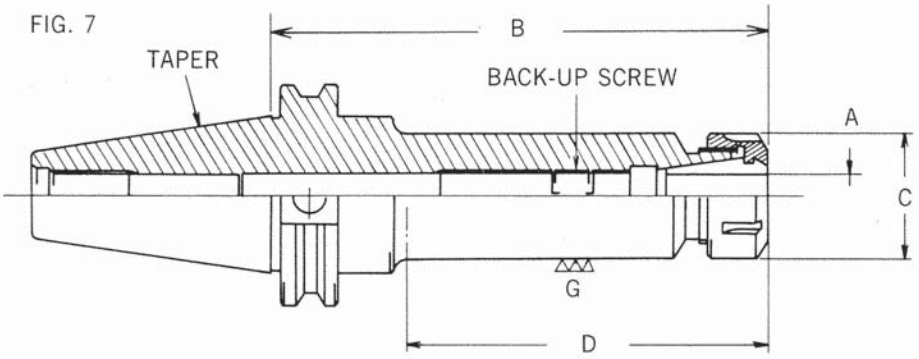

V FLANGE TOOL SHANK
ER HIGH PRECISION MICRO MILLING CHUCKS

TAPER	ORDER NO.	RANGE A	COLLET	B	C	D	FIG.
40	140-101-3	.019-.196	#101 (ER8)	2.50	.47	1.00	1
	140-101-5			5.00		1.20	4
	140-101-9			9.00		5.00	4
	140-102-3	.019-.275	#102 (ER11)	2.50	.75	1.00	2
	140-102-5			5.00		1.24	5
	140-102-9			9.00		6.00	5
	140-103-3	.039-.393	#103 (ER16)	2.50	1.10	1.12	2
	140-103-4			4.00		2.50	6
	140-103-6			6.00		4.43	6
	140-103-9			9.00		7.43	6
	140-107-3	.039-.511	#107 (ER20)	2.50	1.34	1.12	2
	140-107-4			4.00		2.62	6
	140-107-6			6.00		4.43	6
	140-107-9			9.00		7.43	6
	140-108-3	.039-.629	#108 (ER25)	2.50	1.64	1.10	3
	140-108-4			4.00		2.62	7
	140-108-6			6.00		4.62	7
	140-108-9			9.00		7.62	7
	140-109-3	.039-.787	#109 (ER32)	2.50	1.97	1.10	3
	140-109-4			4.00		2.62	7
	140-109-6			6.00		4.62	7
	140-109-9			9.00		7.62	7

Note: Purchase collets (p128) and wrenches (p155) separately.

V FLANGE TOOL SHANK
ER HIGH PRECISION MICRO MILLING CHUCKS

TAPER	ORDER NO.	RANGE A	COLLET	B	C	D	FIG.
50	150-103-4	.039-.393	#103 (ER16)	3.50	1.10	1.93	2
	150-103-6			6.00		4.23	6
	150-103-9			9.00		7.23	6
	150-103-12			11.80		10.03	6
	150-107-4	.039-.511	#107 (ER20)	3.50	1.34	1.93	2
	150-107-6			6.00		4.23	6
	150-107-9			9.00		7.23	6
	150-107-12			11.80		10.03	6
	150-108-4	.039-.629	#108 (ER25)	3.50	1.64	1.93	3
	150-108-6			6.00		4.23	7
	150-108-9			9.00		7.23	7
	150-108-12			11.80		10.03	7
	150-109-4	.039-.787	#109 (ER32)	3.50	1.97	2.13	3
	150-109-6			6.00		4.43	7
	150-109-9			9.00		7.43	7
	150-109-12			11.80		10.23	7

Note: Purchase collets (p128) and wrenches (p155) separately.

BT FLANGE TOOL SHANK

ER HIGH PRECISION MICRO MILLING CHUCKS

PRE-BALANCED FOR HIGHER R.P.M.

FIG. 1

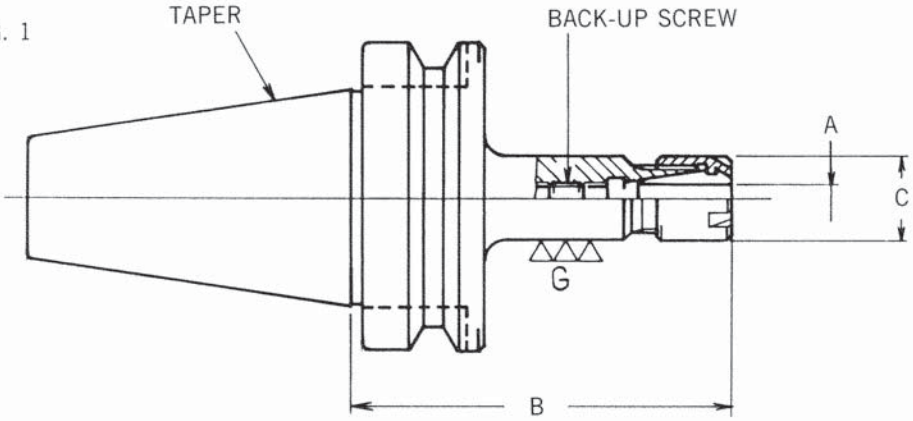

FIG. 2

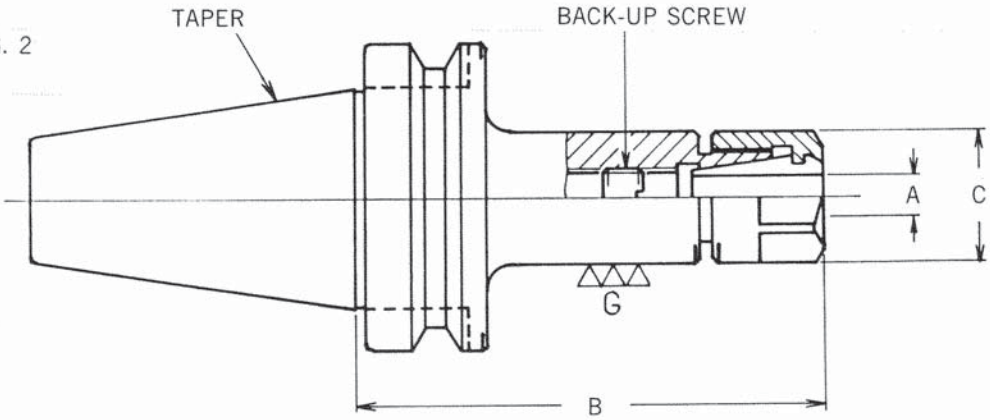

FIG. 3

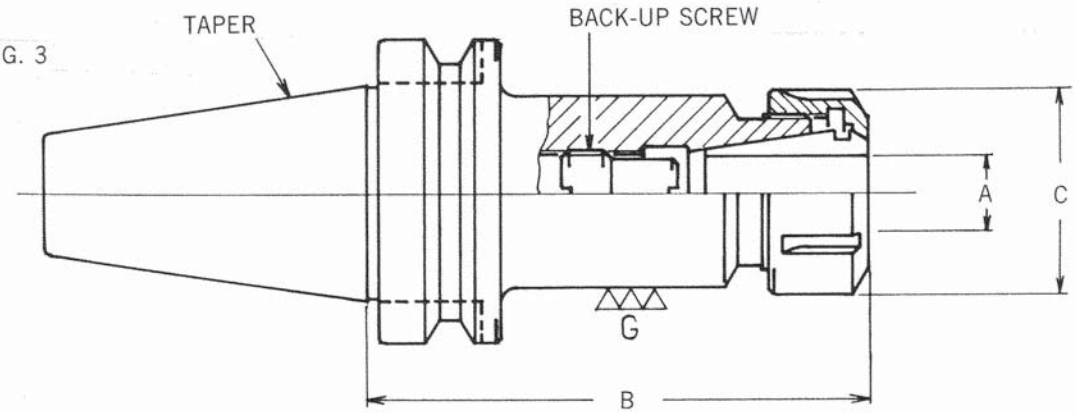

BT FLANGE TOOL SHANK

ER HIGH PRECISION MICRO MILLING CHUCKS

PRE-BALANCED FOR HIGHER R.P.M.

- **GUARANTEED ACCURACIES**
  Face of Chuck: .00015" TIR
  At Length of 4X Dia.: .00040" TIR
- **COOLANT-THRU BODY**
  Up to 1,500 PSI with coolant disc and coolant nuts.
- **GROUND CHUCK BODY FOR PERFECT TOOL BALANCE**

TAPER	ORDER NO.	RANGE A	COLLET	B	C	FIG.
30	230-101-3	.019 - .196	#101 (ER8)	2.50	.47	1
	230-101-5			5.00		1
	230-102-3	.019 - .275	#102 (ER11)	2.50	.75	2
	230-102-5			5.00		2
	230-103-2	.039 - .393	#103 (ER16)	2.36	1.10	2
	230-108-2	.039 - .629	#108 (ER25)	2.36	1.64	3
	230-109-3	.039 - .787	#109 (ER32)	2.95	1.97	3
40	240-101-3	.019 - .196	#101 (ER8)	2.50	.47	1
	240-101-5			5.00		1
	240-102-3	.019 - .275	#102 (ER11)	2.50	.75	2
	240-102-5			5.00		2
	240-103-3	.039 - .393	#103 (ER16)	2.50	1.10	2
	240-103-4			4.00		2
	240-103-6			6.00		2
	240-103-8			7.87		2
	240-107-3	.039-.511	#107 (ER20)	2.50	1.34	2
	240-107-4			4.00		2
	240-107-6			6.00		2
	240-107-8			7.87		2
	240-108-3	.039-.629	#108 (ER25)	2.50	1.64	3
	240-108-4			4.00		3
	240-109-3	.039-.787	#109 (ER32)	2.50	1.97	3
	240-109-4			4.00		3

Note: Purchase collets (p128) and wrenches (p155) separately.

ER HIGH PRECISION MICRO MILLING CHUCK EXTENSIONS

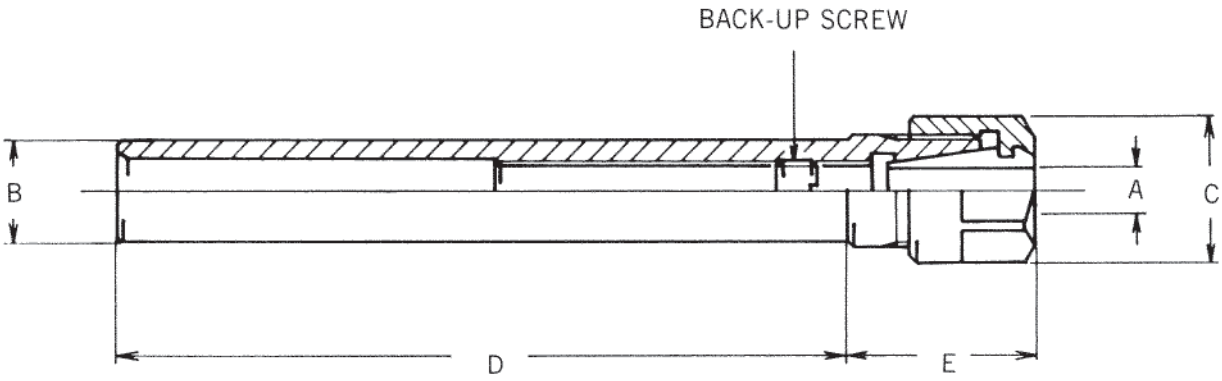

ORDER NO.	RANGE A	COLLET	B	C	D	E
702-101-3	.019-.196	#101 (ER8)	8MM	.47	3.15	1.02
704-102-6	.019-.275	#102 (ER11)	1/2	.75	5.50	1.04
706-103-6	.039-.393	#103 (ER16)	3/4	1.10	5.50	1.42

Note: Purchase collets (p128) and wrenches (p155) separately.

ER COLLETS

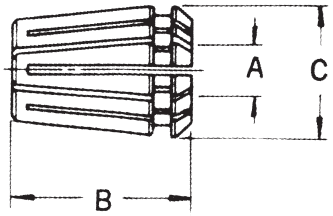

SIZE	RANGE A	B	C
101 (ER8)	.019-.196	.53	.33
102 (ER11)	.019-.275	.71	.45
103 (ER16)	.039-.393	1.06	.67
107 (ER20)	.039-.511	1.22	.83
108 (ER25)	.039-.629	1.38	1.02
109 (ER32)	.039-.787	1.57	1.30
111 (ER40)	.118-1.023	1.81	1.61

SIZE	CHUCKING RANGE A	ORDER NO.
#101 (ER8)	.019-.039	0-101-001
	.039-.059	0-101-002
	.059-.078	0-101-003
	.078-.098	0-101-004
	.098-.118	0-101-005
	.118-.137	0-101-006
	.137-.157	0-101-007
	.157-.177	0-101-008
	.177-.196	0-101-009
#102 (ER11)	.019-.039	0-102-001
	.039-.059	0-102-002
	.059-.078	0-102-003
	.078-.098	0-102-004
	.098-.118	0-102-005
	.118-.137	0-102-006
	.137-.157	0-102-007
	.157-.177	0-102-008
	.177-.196	0-102-009
	.196-.216	0-102-010
	.216-.236	0-102-011
	.236-.255	0-102-012
	.255-.275	0-102-013

SIZE	CHUCKING RANGE A	ORDER NO.
#103 (ER16)	.039-.078	0-103-001
	.078-.118	0-103-002
	.118-.157	0-103-003
	.157-.196	0-103-004
	.196-.236	0-103-005
	.236-.275	0-103-006
	.275-.314	0-103-007
	.314-.354	0-103-008
	.354-.393	0-103-009
#107 (ER20)	.039-.078	0-107-001
	.078-.118	0-107-002
	.118-.157	0-107-003
	.157-.196	0-107-004
	.196-.236	0-107-005
	.236-.275	0-107-006
	.275-.314	0-107-007
	.314-.354	0-107-008
	.354-.393	0-107-009
	.393-.433	0-107-010
	.433-.472	0-107-011
	.472-.511	0-107-012

Note: Collet collapses at .019" for #101 & #102, and at .039" for #103, #107, #108, #109, & #111.
Note: When Ordering, specify ORDER NO.
Note: High Precision Grade Collets are available. Add "P" to the end of ORDER NO.
Note: Inch size collets are available upon request.

ER COLLETS

SIZE	CHUCKING RANGE A	ORDER NO.
#108 (ER25)	.039-.078	0-108-001
	.078-.118	0-108-002
	.118-.157	0-108-003
	.157-.196	0-108-004
	.197-.236	0-108-005
	.236-.275	0-108-006
	.275-.314	0-108-007
	.314-.354	0-108-008
	.354-.393	0-108-009
	.393-.433	0-108-010
	.433-.472	0-108-011
	.472-.511	0-108-012
	.511-.551	0-108-013
	.551-.590	0-108-014
	.590-.629	0-108-015
#109 (ER32)	.039-.078	0-109-001
	.078-.118	0-109-002
	.118-.157	0-109-003
	.157-.196	0-109-004
	.196-.236	0-109-005
	.236-.275	0-109-006
	.275-.314	0-109-007
	.314-.354	0-109-008
	.354-.393	0-109-009
	.393-.433	0-109-010
	.433-.472	0-109-011
	.472-.511	0-109-012
	.511-.551	0-109-013
	.551-.590	0-109-014
	.590-.629	0-109-015
	.629-.669	0-109-016
	.669-.708	0-109-017
	.708-.748	0-109-018
	.748-.787	0-109-019

SIZE	CHUCKING RAGE A	ORDER NO.
#111 (ER40)	.118-.157	0-111-001
	.157-.196	0-111-002
	.196-.236	0-111-003
	.236-.275	0-111-004
	.275-.314	0-111-005
	.314-.354	0-111-006
	.354-.393	0-111-007
	.393-.433	0-111-008
	.433-.472	0-111-009
	.472-.511	0-111-010
	.511-.551	0-111-011
	.551-.590	0-111-012
	.590-.629	0-111-013
	.629-.669	0-111-014
	.669-.708	0-111-015
	.708-.748	0-111-016
	.748-.787	0-111-017
	.787-.826	0-111-018
	.826-.866	0-111-019
	.866-.905	0-111-020
	.905-.944	0-111-021
	.944-.984	0-111-022
	.984-1.023	0-111-023

Note: Collet collapses at .019" for #101 & #102, and at .039" for #103, #107, #108, #109, and #111.
Note: When Ordering, specify ORDER NO.
Note: High Precision Grade Collets are available. Add "P" to the end of ORDER NO.
Note: Inch size collets are available upon request.

ER TAPPING COLLETS

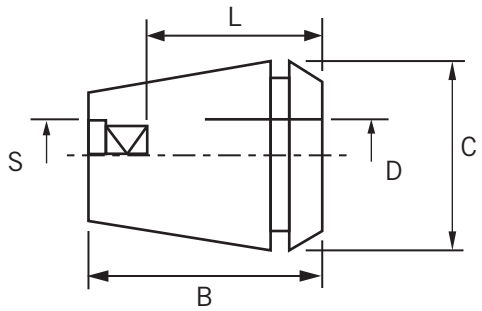

SIZE	RANGE	B	C
102(ER11)	#4-#6	0.71	0.45
103(ER16)	#4-5/16	1.06	0.67
107(ER20)	#8-1/2	1.22	0.83
108(ER25)	#8-5/8, 1/8NPT	1.38	1.02
109(ER32)	#8-13/16, 1/8NPT, 1/4NPT	1.57	1.30
111(ER40)	1/4-1", 1/8NPT, 1/4NPT, 3/8NPT, 1/2NPT	1.81	1.61

SIZE	TAP SIZE	D	S	L	ORDER NO.
#102(ER11)	#4-#6	.141	.110	.71	0-102-04
#103(ER16)	#4-#6	.141	.110	.71	0-103-04
	#8	.168	.131	.71	0-103-08
	#10	.194	.152	.71	0-103-10
	#12	.220	.165	.71	0-103-12
	1/4	.255	.191	.71	0-103-13
	5/16	.318	.238	.87	0-103-14
#107(ER20)	#8	.168	.131	.71	0-107-08
	#10	.194	.152	.71	0-107-10
	#12	.220	.165	.71	0-107-12
	1/4	.255	.191	.71	0-107-13
	5/16	.318	.238	.87	0-107-14
	3/8	.381	.286	.87	0-107-15
	7/16	.323	.242	.87	0-107-16
	1/2	.367	.275	.87	0-107-17
#108(ER25)	#8	.168	.131	.71	0-108-08
	#10	.194	.152	.71	0-108-10
	#12	.220	.165	.71	0-108-12
	1/4	.255	.191	.71	0-108-13
	5/16	.318	.238	.87	0-108-14
	3/8	.381	.286	.87	0-108-15
	7/16	.323	.242	.87	0-108-16
	1/2	.367	.275	.87	0-108-17
	9/16	.429	.322	.98	0-108-21
	5/8	.480	.360	.98	0-108-22
	1/8NPT	.437	.328	.98	0-108-19

Note: When Ordering, specify ORDER NO.

ER TAPPING COLLETS

SIZE	TAP SIZE	D	S	L	ORDER NO.
#109(ER32)	#8	.168	.131	.71	0-109-08
	#10	.194	.152	.71	0-109-10
	#12	.220	.165	.71	0-109-12
	1/4	.255	.191	.71	0-109-13
	5/16	.318	.238	.87	0-109-14
	3/8	.381	.286	.87	0-109-15
	7/16	.323	.242	.87	0-109-16
	1/2	.367	.275	.87	0-109-17
	9/16	.429	.322	.98	0-109-21
	5/8	.480	.360	.98	0-109-22
	3/4	.590	.442	.98	0-109-24
	1/8NPT	.437	.328	.98	0-109-19
	1/4NPT	.562	.421	.98	0-109-29
#111(ER40)	1/4	.255	.191	.71	0-111-13
	5/16	.318	.238	.87	0-111-14
	3/8	.381	.286	.87	0-111-15
	7/16	.323	.242	.87	0-111-16
	1/2	.367	.275	.87	0-111-17
	9/16	.429	.322	.98	0-111-21
	5/8	.480	.360	.98	0-111-22
	3/4	.590	.442	.98	0-111-24
	7/8	.697	.523	.98	0-111-26
	1	.800	.600	1.10	0-111-28
	1/8NPT	.437	.328	.98	0-111-19
	1/4NPT	.562	.421	.98	0-111-29
	3/8NPT	.700	.531	.98	0-111-30
	1/2NPT	.687	.515	.98	0-111-31

Note: When Ordering, specify ORDER NO.

ER COOLANT NUTS

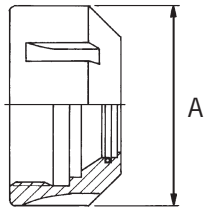

CHUCK SIZE	ORDER NO. COOLANT NUT	ORDER NO. WRENCH	A
#103 (ER16)	1-2103	10916	1.10
#107 (ER20)	1-2107	10920	1.34
#108 (ER25)	1-2108	10925	1.65
#109 (ER32)	1-2109	10932	1.97
#111 (ER40)	1-2111	10940	2.48

Note: Use Coolant Nuts in conjunction with coolant discs.
Purchase Coolant Discs separately.

ER COOLANT DISCS

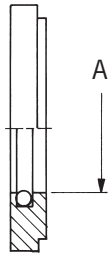

RANGE A	ORDER NO. #103 (ER16)	ORDER NO. #107 (ER20)	ORDER NO. #108 (ER25)	ORDER NO. #109 (ER32)	ORDER NO. #111 (ER40)
.118-.137	1-3003	1-4003	1-5003	1-6003	1-7003
.137-.157	1-3004	1-4004	1-5004	1-6004	1-7004
.157-.177	1-3005	1-4005	1-5005	1-6005	1-7005
.177-.197	1-3006	1-4006	1-5006	1-6006	1-7006
.197-.216	1-3007	1-4007	1-5007	1-6007	1-7007
.216-.236	1-3008	1-4008	1-5008	1-6008	1-7008
.236-.256	1-3009	1-4009	1-5009	1-6009	1-7009
.256-.276	1-3010	1-4010	1-5010	1-6010	1-7010
.276-.295	1-3011	1-4011	1-5011	1-6011	1-7011
.295-.315	1-3012	1-4012	1-5012	1-6012	1-7012
.315-.335	1-3013	1-4013	1-5013	1-6013	1-7013
.335-.354	1-3014	1-4014	1-5014	1-6014	1-7014
.354-.374	1-3015	1-4015	1-5015	1-6015	1-7015
.374-.394	1-3016	1-4016	1-5016	1-6016	1-7016

Note: Use Coolant Discs in conjunction with Coolant Nuts. Purchase Coolant Nuts separately.

ER COOLANT DISCS

RANGE A	ORDER NO. #103 (ER16)	ORDER NO. #107 (ER20)	ORDER NO. #108 (ER25)	ORDER NO. #109 (ER32)	ORDER NO. #111 (ER40)
.394-.413		1-4017	1-5017	1-6017	1-7017
.413-.433		1-4018	1-5018	1-6018	1-7018
.433-.452		1-4019	1-5019	1-6019	1-7019
.452-.472		1-4020	1-5020	1-6020	1-7020
.472-.492		1-4021	1-5021	1-6021	1-7021
.492-.512		1-4022	1-5022	1-6022	1-7022
.512-.532			1-5023	1-6023	1-7023
.532-.551			1-5024	1-6024	1-7024
.551-.571			1-5025	1-6025	1-7025
.571-.590			1-5026	1-6026	1-7026
.590-.610			1-5027	1-6027	1-7027
.610-.630			1-5028	1-6028	1-7028
.630-.649				1-6029	1-7029
.649-.669				1-6030	1-7030
.669-.689				1-6031	1-7031
.689-.708				1-6032	1-7032
.708-.728				1-6033	1-7033
.728-.748				1-6034	1-7034
.748-.767				1-6035	1-7035
.767-.787				1-6036	1-7036
.787-.807					1-7037
.807-.826					1-7038
.826-.846					1-7039
.846-.866					1-7040
.866-.885					1-7041
.885-.905					1-7042
.905-.925					1-7043
.925-.944					1-7044
.944-.964					1-7045
.964-.984					1-7046
.984-1.003					1-7047
1.003-1.023					1-7048

TG COLLET CHUCKS

- PRE-BALANCED SYMMETRICALLY FOR HIGHER R.P.M.
- GROUND CHUCK BODY FOR PERFECT TOOL BALANCE
- GUARANTEED ACCURACY WITHIN .00015" AT FACE
- COOLANT THRU BODY WITH SEALING PAD ON #100
- MADE OF HIGH QUALITY CHROME MOLYBDENUM ALLOY STEEL

V FLANGE TOOL SHANK
TG COLLET CHUCKS
PRE-BALANCED FOR HIGHER R.P.M.

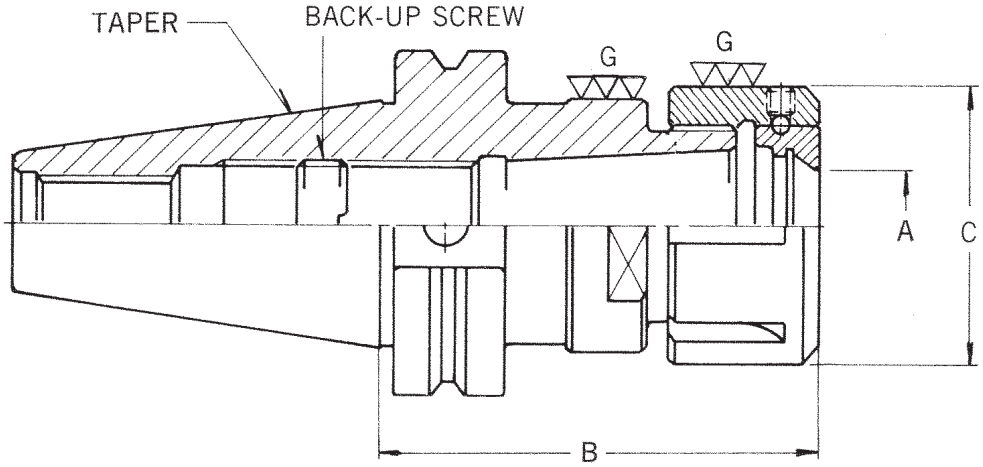

- **GUARANTEED ACCURACIES**
  Face of Chuck: .00015" TIR
  At Length of 4X Dia.: .00040" TIR

Taper Contact	90%
Taper Tolerance over 12"	.0005"
Surface Roughness	6 Micro Inch
Taper Roundness	.00004" TIR

- **COOLANT-THRU BODY**
  Back-up screw with sealing pad is available to convert conventional collet chuck to coolant thru body type.
- **NUT FLUSH FACE WITH COLLET**
- **GROUND CHUCK BODY FOR PERFECT TOOL BALANCE**

TAPER	ORDER NO.	RANGE A	COLLET	B	C
40	140-100-4*	.093-1.000	#100 (TG100)	3.50	2.50
	140-100-6*			5.50	
50	150-100-4*	.093-1.000	#100 (TG100)	3.50	
	150-100-6*			6.00	
	150-100-8*			8.00	

Note: Purchase collets (p137) and wrenches (p156) separately.
Note: * means the chuck body is ground for higher R.P.M.
Note: * means V Flange is symmetrically balanced.

BT FLANGE TOOL SHANK
TG COLLET CHUCKS
PRE-BALANCED FOR HIGHER R.P.M

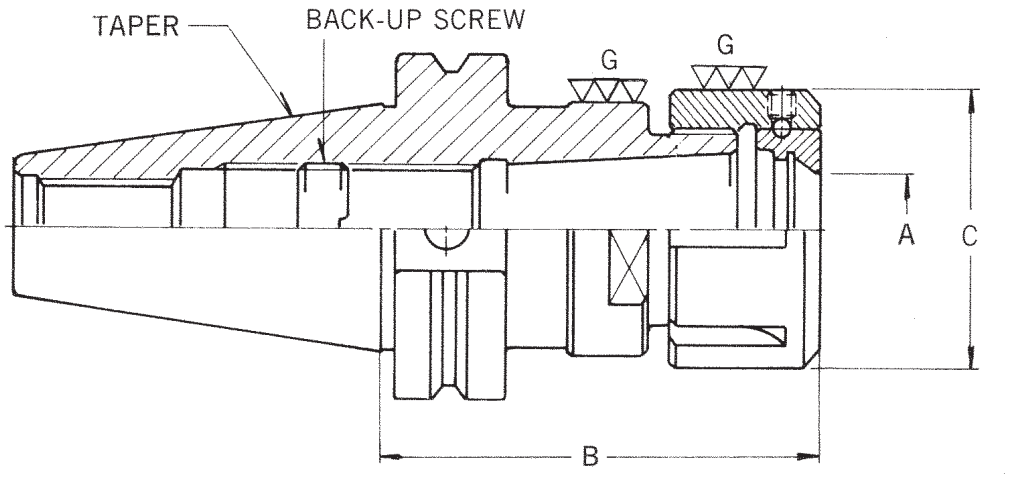

- **CONCENTRICITY AT CAVITY WITHIN .00015" TIR**
- **COOLANT-THRU BODY**
  Back-up screw with sealing pad is available to convert conventional collet chuck to coolant thru body type.
- **NUT FLUSH FACE WITH COLLET**
- **GROUND CHUCK BODY FOR PERFECT TOOL BALANCE**

TAPER	ORDER NO.	RANGE A	COLLET	B	C
40	240-100-4*	.093-1.000	#100(TG100)	3.50	2.50

Note: Purchase collets (p137) and wrenches (p156) separately.
Note: * means that the chuck body is ground for higher R.P.M.

TG COLLETS

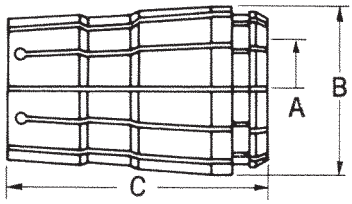

TYPE	RANGE A	INCREMENT	B	C
100 (TG100)	.093-1.000	1/64	1.379	2.375

COLLET SIZE	ORDER NO.
3/32	0-100-006
7/64	0-100-007
1/8	0-100-008
9/64	0-100-009
5/32	0-100-010
11/64	0-100-011
3/16	0-100-012
13/64	0-100-013
7/32	0-100-014
15/64	0-100-015
1/4	0-100-016
17/64	0-100-017
9/32	0-100-018
19/64	0-100-019
5/16	0-100-020
21/64	0-100-021
11/32	0-100-022
23/64	0-100-023
3/8	0-100-024
25/64	0-100-025
13/32	0-100-026
27/64	0-100-027
7/16	0-100-028
29/64	0-100-029
15/32	0-100-030
31/64	0-100-031
1/2	0-100-032
33/64	0-100-033
17/32	0-100-034
35/64	0-100-035

COLLET SIZE	ORDER NO.
9/16	0-100-036
37/64	0-100-037
19/32	0-100-038
39/64	0-100-039
5/8	0-100-040
41/64	0-100-041
21/32	0-100-042
43/64	0-100-043
11/16	0-100-044
45/64	0-100-045
23/32	0-100-046
47/64	0-100-047
3/4	0-100-048
49/64	0-100-049
25/32	0-100-050
51/64	0-100-051
13/16	0-100-052
53/64	0-100-053
27/32	0-100-054
55/64	0-100-055
7/8	0-100-056
57/64	0-100-057
29/32	0-100-058
59/64	0-100-059
15/16	0-100-060
61/64	0-100-061
31/32	0-100-062
63/64	0-100-063
1	0-100-064

TAP HOLDERS

PATENTED

- **TENSION AND COMPRESSION TYPE TAP HOLDERS**
- **HARDENED AND PRECISION GROUND**
- **MADE OF HIGH QUALITY CHROME MOLYBDENUM ALLOY STEEL**

TAP HOLDERS

TENSION & COMPRESSION TYPE

PATENTED

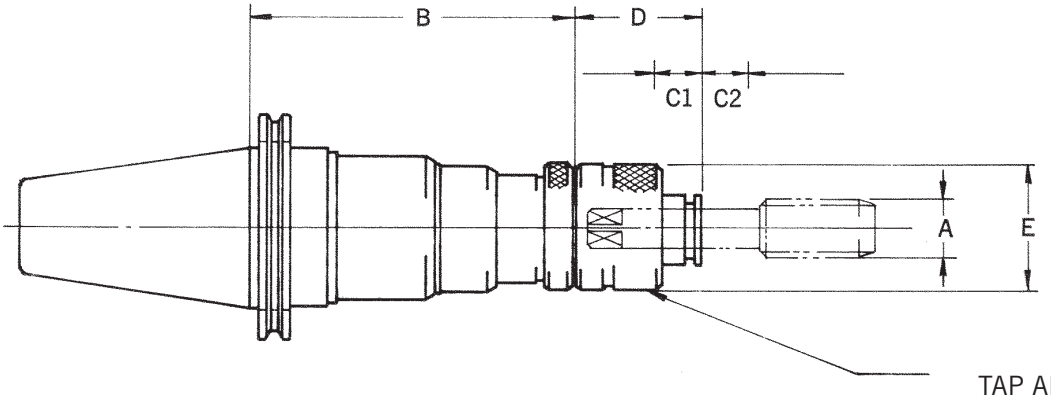

TAP ADAPTER

V FLANGE TOOL SHANK

TAPER	SIZE	ORDER NO.	RANGE	A	B	C1	C2	D*	E*
40	#1	140-012-4	#4 - 1/2 1/8	hand pipe	3.94	.12	.59	1.26	1.57
	#2	140-024-5	1/2 - 1 1/4 - 1/2	hand pipe	4.92	.31	.79	1.34	2.20
50	#1	150-012-4	#4 - 1/2 1/8	hand pipe	4.33	.12	.59	1.26	1.57
	#2	150-024-5	1/2 - 1 1/4 - 1-1/2	hand pipe	4.53	.31	.79	1.34	2.20

Note: * figures show the dimensions of Positive Drive Tap Adapter.
Note: Purchase Tap Adapter (p141) separately.

QUICK CHANGE TAP HOLDERS
SHORT PROJECTION
TENSION & COMPRESSION TYPE

- 1/4 turn of lock nut presses 3 pcs. steel ball and clamps tap adapter.
- A set screw on the lock nut for further assurance of locking.
- Designed for N/C turning, and short length eliminates clearance problem.
- Axial float, tension & compression built into the shank for most ideal tapping.

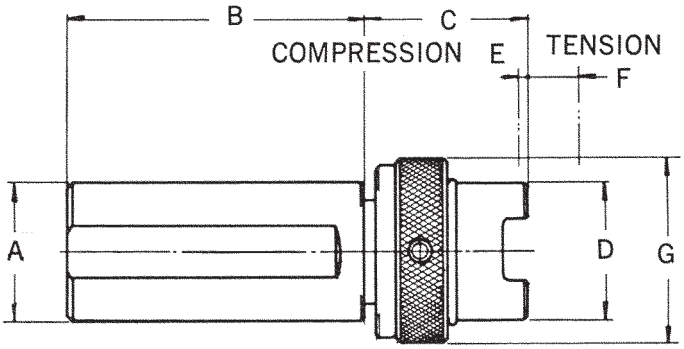

SIZE	ORDER NO.	A	B	RANGE	C	D	E	F	G
#1	706-012-3	3/4	2.00	#4 - 1/2	1.12	.98	1/16	3/8	1.26
	708-012-3	1		1/8 PT					

Note: Purchase Tap adapters (p141) separately.

TAP ADAPTERS

WITH POSITIVE DRIVE (NON-TORQUE CONTROL)

- Quick-change of tap adapters and taps insertion and removal in seconds

PATENTED

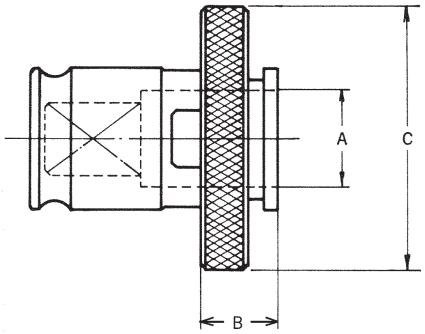

SIZE	ORDER NO.	TAP ADAPTER	A	B	C
#1	1-112-004	TPD12-#4-#6	.141	1.26	1.57
	1-112-008	TPD12-#8	.168		
	1-112-010	TPD12-#10	.194		
	1-112-012	TPD12-#12	.220		
	1-112-013	TPD12-1/4	.255		
	1-112-014	TPD12-5/16	.318		
	1-112-015	TPD12-3/8	.381		
	1-112-016	TPD12-7/16	.323		
	1-112-017	TPD12-1/2	.367		
	1-112-018	TPD12-1/8PTSS	.3125	1.06	1.57
	1-112-019	TPD12-1/8PTLS	.4375		
#2	1-124-020	TPD24-1/2	.357	1.34	2.20
	1-124-021	TPD24-9/16	.429		
	1-124-022	TPD24-5/8	.480		
	1-124-023	TPD24-11/16	.542		
	1-124-024	TPD24-3/4	.590		
	1-124-025	TPD24-13/16	.652		
	1-124-026	TPD24-7/8	.697		
	1-124-027	TPD24-15/16	.760		
	1-124-028	TPD24-1	.800		
	1-124-029	TPD24-1/4 PT	.5625	1.34	2.20
	1-124-030	TPD24-3/8 PT	.700		
	1-124-031	TPD24-1/2 PT	.6875		

LEUTER HI-SPEED HEADS

HIGH SPEED MILLING AND DRILLING ON DIES, ALUMINUM PARTS, EDM ELECTRODES, ETC.

- HIGH SPEED OPERATION FROM 4,000 TO 60,000 R.P.M
- CONTINUOUS AND SMOOTH OUTPUT FROM 400 TO 900W
- AUTOMATIC SHUT-OFF SWITCH FOR SAFETY
- LOAD MONITORING METER ON POWER SUPPLY
- QUICK DISCONNECTING ELECTRIC CORD PROVIDED WITH POWER SUPPLY

LEUTER HI-SPEED HEADS

NO MACHINE SPINDLE ROTATION REQUIRED

Hi-Speed Head Model No.
HS-2550TP

4,000 - 60,000 R.P.M
Stepless variable speed control

CONTINUOUS SMOOTH OPERATION FOR MANY HOURS
Self contained, built-in air cooling system

AIR PURGE
Built-in air purge system ensures trouble-free operation for many years to come.

NO DAILY MAINTENANCE REQUIRED
Spindle bearing completely sealed and packed with special grease, run many months without maintenance

CONCENTRICITY WITHIN .0004" T.I.R. AT LENGTH OF 4X DIA
Ideal for ample high speed milling and drilling operations with wide variety of product line

LOAD METER ON POWER SUPPLY
Displaying the machine load constantly at power supply to maximize efficiency

AUTOMATIC SHUT-OFF FOR SAFETY
Power supply equipped with high efficiency inverter and automatic shut-off switch for over load, which can be synchronized with machine.

REPLACEABLE SHANK FOR VARIETY OF MACHINE SPINDLE ON ALL MODELS

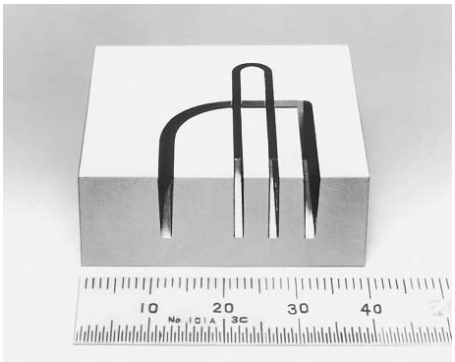

Super finish at high feed rate in small grooving.

MODEL NO.	POWER SUPPLY	POWER SOURCE	OUTPUT (WATT)
HS-2220TP	HSC-2220	AC200-240V, 3PH 60Hz	500
HS-2550TP	HSC-2550		400
HS-3300TP	HSC-3300		900
HS-3400TP	HSC-3400		900
HS-600TP	HSC-600		450

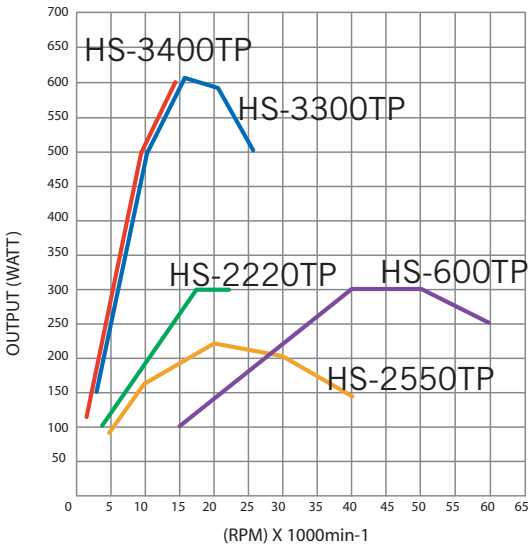

LEUTER HI-SPEED HEADS

MODEL #HS-2220TP

- Ideal for small milling on dies and small drilling applications

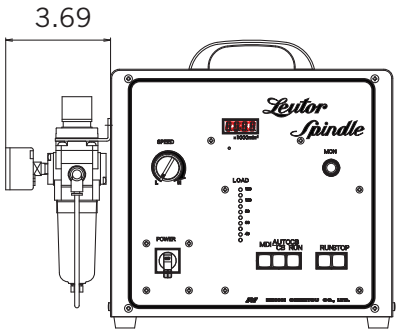

Dimensions: 9.92 x 6.89 x 10.12

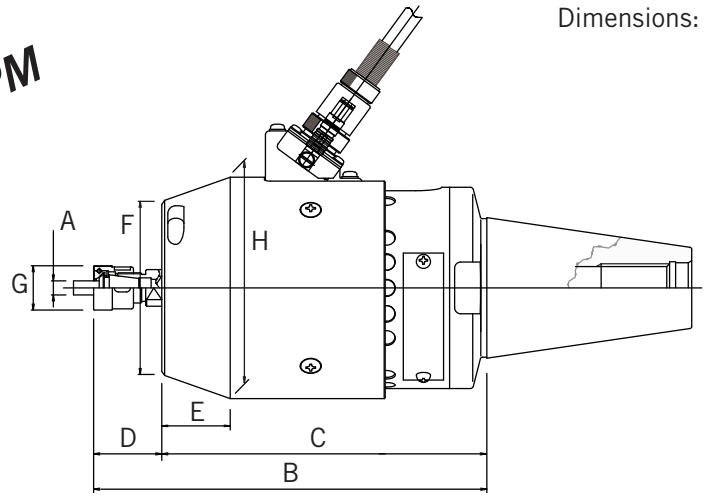

HI-SPEED HEAD

ORDER NO.	R.P.M	OUTPUT (WATT)	RANGE A	B	C	D	E	F	G	H	WT* (LB.)
HS-2220TP	4,000 - 22,200	500	.020 - .276	7.69	6.36	1.34	1.34	3.39	.87	4.33	18.7

Note: Select the shank (bolted-on and replaceable) when ordering.
Note: Complete with shank, power supply, storage stand, wrenches, and collets (1 ea. for 1/8", 3/16", and 1/4").
Note: * means total weight with 11150 shank.

SHANKS

TAPER	V FLANGE	BT FLANGE	NMTB	STRAIGHT
35	—	10235	—	—
40	11140	10240	10400	
45	11145	10245	—	
50	11150	10250	10500	
3/4	—	—	—	11006
1				11008

Note: Both V and BT shanks come without flange for ATC.

COLLETS

ORDER NO.	SIZE
0-102-1	.020 - .039
0-102-2	.039 - .059
0-102-3	.059 - .079
0-102-4	.079 - .098
0-102-5	.098 - .118
0-102-6	.118 - .138
0-102-7	.138 - .157
0-102-8	.157 - .197
0-102-9	.197 - .236
0-102-10	.236 - .276

LEUTER HI-SPEED HEADS

MODEL #HS-2550TP

- Ideal for small milling on dies and small drilling applications

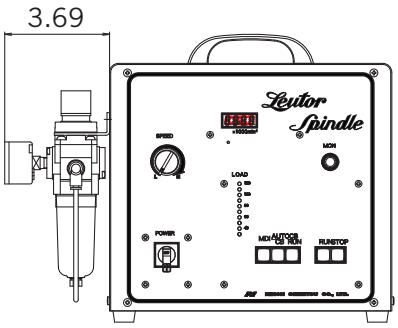

Dimensions: 9.92 x 6.89 x 10.12

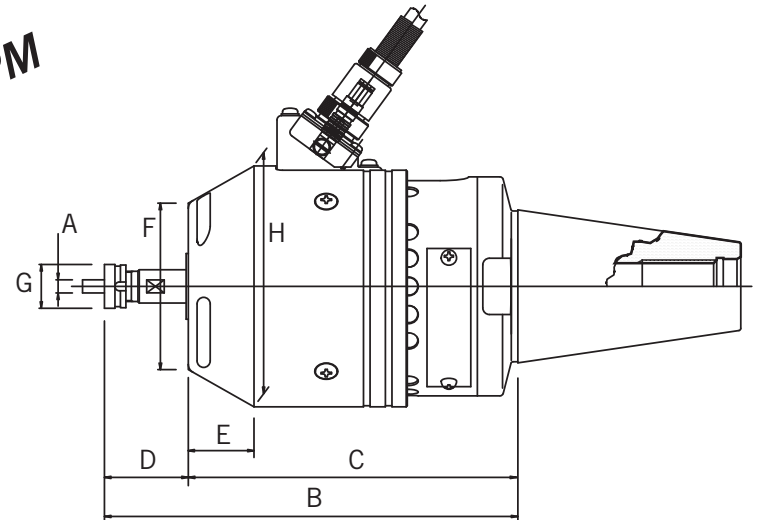

HI-SPEED HEAD

ORDER NO.	R.P.M	OUTPUT (WATT)	RANGE A	B	C	D	E	F	G	H	WT* (LB.)
HS-2550TP	5,000 - 40,000	400	1/8 - 1/4	7.43	5.93	1.51	1.18	2.99	.79	4.33	18.0

Note: Select the shank (bolted-on and replaceable) when ordering.
Note: Complete with shank, power supply, storage stand, wrenches, and collets (1 ea. for 1/8", 3/16", and 1/4").
Note: ** means total weight with 11150 shank.

SHANKS

TAPER	V FLANGE	BT FLANGE	NMTB	STRAIGHT
35	—	10235	—	—
40	11140	10240	10400	
45	11145	10245	—	
50	11150	10250	10500	
3/4	—	—	—	11006
1				11008

Note: Both V and BT shanks come without flange for ATC.

COLLETS

ORDER NO.	SIZE
0-202-008	.1250
0-202-012	.1875
0-202-016	.2500

Note: No collapsible range for all collets.

LEUTER HI-SPEED HEADS

MODEL #HS-600TP

- Ideal for ultra high speed milling and drilling applications

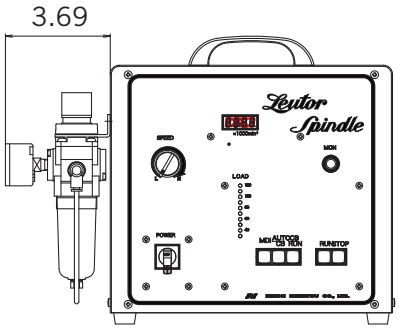

Dimensions: 9.29 x 6.89 x 10.12

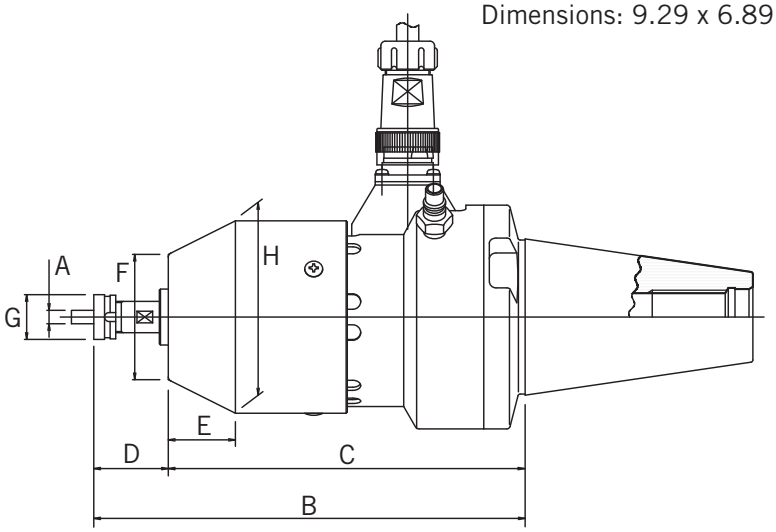

HI-SPEED HEAD

ORDER NO.	R.P.M	OUTPUT (WATT)	RANGE A	B	C	D	E	F	G	H	WT* (LB.)
HS-600TP	20,000 - 60,000	450	1/8 - 1/4	7.59	6.28	1.31	1.18	2.20	.79	3.39	15.8

Note: Select the shank (bolted-on and replaceable) when ordering.
Note: Complete with shank, power supply, storage stand, wrenches, and collets (1 ea. for 1/8", 3/16", and 1/4").
Note: * means total weight with 11150 shank.

SHANKS

TAPER	V FLANGE	BT FLANGE	NMTB	STRAIGHT
35	—	10235	—	—
40	11140	10240	10400	
45	11145	10245	—	
50	11150	10250	10500	
3/4	—	—	—	11006
1				11008

Note: Both V and BT shanks come without flange for ATC.

COLLETS

ORDER NO.	SIZE
0-202-008	.1250
0-202-012	.1875
0-202-016	.2500

Note: No collapsible range for all collets.

LEUTER HI-SPEED HEADS

MODEL #HS-3300TP

- Ideal for high speed milling on AL parts with 3/8" end mills.
- Ideal for milling on dies with ball nose end mills.

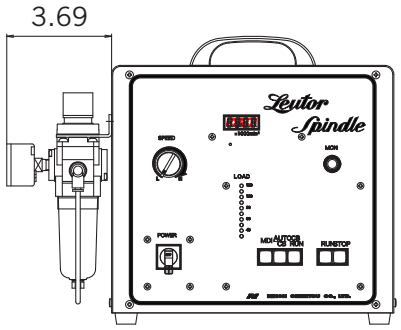

Dimensions: 9.92 x 6.89 x 10.12

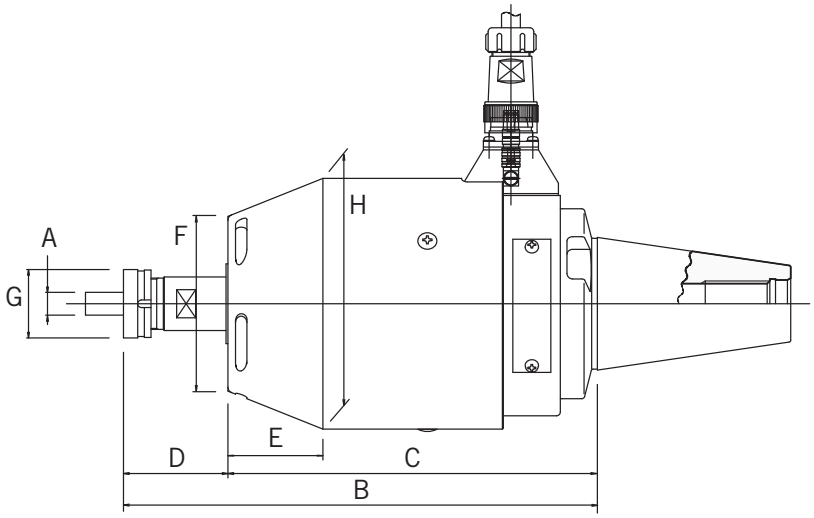

HI-SPEED HEAD

ORDER NO.	R.P.M	OUTPUT (WATT)	RANGE A	B	C	D	E	F	G	H	WT* (LB.)
HS-3300TP	2,500 - 23,000	900	1/8 - 1/2	9.82	7.66	2.17	1.97	3.62	1.42	5.20	29.5

Note: Select the shank (bolted-on and replaceable) when ordering.
Note: Complete with shank, power supply, storange stand wrenches, and collets (1 ea. for 1/8", 1/4", 3/8", and 1/2").
Note: * means total weight with 11150 shank.

SHANKS

TAPER	V FLANGE	BT FLANGE	NMTB	STRAIGHT
35	—	10235	—	—
40	11140	10240	10400	
45	11145	10245	—	
50	11150	10250	10500	
3/4	—	—	—	11006
1				11008

Note: Both V and BT shanks come without flange for ATC.

COLLETS

ORDER NO.	SIZE
0-204-008	.1250
0-204-016	.2500
0-204-024	.3750
0-204-032	.5000

Note: No collapsible range for all collets.

LEUTER HI-SPEED HEADS

MODEL #HS-3400TP

- Ideal for high speed milling on AL parts with 3/8" or 1/2" end mills.
- Ideal for milling on dies with ball nose end mills.
- Great as the main spindle of dedicated machine.

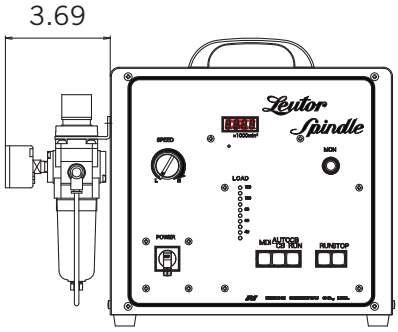

Dimensions: 9.29 x 6.89 x 10.12

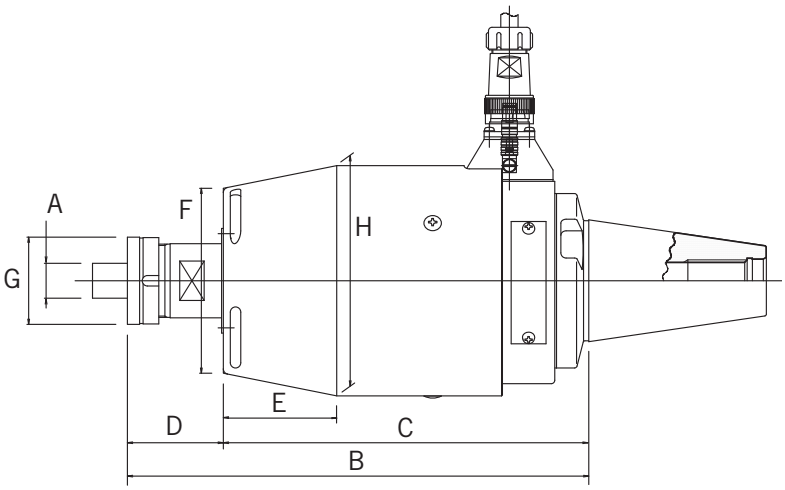

HI-SPEED HEAD

ORDER NO.	R.P.M	OUTPUT (WATT)	RANGE A	B	C	D	E	F	G	H	WT* (LB.)
HS-3400TP	2,500-15,000	900	1/8-3/4	10.41	8.25	2.17	2.56	4.17	1.97	5.20	36.2

Note: Select the shank (bolted-on and replaceable) when ordering.
Note: Complete with shank, power supply, storage stand, wrenches, and collets (1 ea. for 1/8", 1/4", 3/8", 1/2', and 3/4").
Note: * means total weight with 11150 shank.

SHANKS

TAPER	V FLANGE	BT FLANGE	NMTB	STRAIGHT
35	—	10235	—	—
40	11140	10240	10400	
45	11145	10245	—	
50	11150	10250	10500	
3/4	—	—	—	11006
1				11008

Note: Both V and BT shanks come without flange for ATC.

COLLETS

ORDER NO.	SIZE
0-206-008	.1250
0-206-016	.2500
0-206-024	.3750
0-206-032	.5000
0-206-048	.7500

Note: No collapsible range for all collets.

LEUTER HI-SPEED HEADS

SAMPLE CUTTING CONDITIONS

MILLING

MODEL	MATERIAL	CUTTING TOOL (DIA x FLUTE LENGTH)			R.P.M.	DEPTH OF CUT	TOTAL DEPTH	FEED RATE (IPM)	MIST LUBE
		DIA.	FLUTE LENGTH	MAT'L					
HS-2220TP	NAK55 Die Steel	.039"	.394"	Carbide	15,000	.0008"	.394"	15.75	Oil
HS-2550TP	Epoxy Glass	.020"	.059"	Carbide	30,000	.012"	.039"	7.87	Dry Air
HS-600TP	SKD11 Die Steel	.024"	.197"	TIN Coated Carbide	60,000	.0002"	.118"	35.43	Semi Dry Air
HS-3300TP	Plastic	.118"	.236"	Carbide	8,000	.040"	.118"	39.37	Dry Air
HS-2550TP	NAK55 Die Steel	.024"	.236"	TIN Coated Carbide	40,000	.0012"	.157"	118.11	Semi Dry Air
HS-3300TP	Aluminum	.315"	—	Carbide	20,000	.020"	—	78.74	Dry Air

DRILLING

MODEL	MATERIAL	CUTTING TOOL (DIA x FLUTE LENGTH)			R.P.M.	DEPTH PER STEP	TOTAL DEPTH	FEED RATE (IPM)	MIST LUBE
		DIA.	FLUTE LENGTH	MAT'L					
HS-2550TP	HPM-1 Die Steel	.0079"	.098"	Carbide	16,000	.001"	.079"	9.45	Oil
HS-2550TP	SKD12 Die Steel	.006"	.098"	Carbide	38,000	.002"	.047"	35.43	Oil
HS-3300TP	MC Nylon	.059"	.315"	Carbide	20,000	.059"	.197"	19.69	Dry Air
HS-2550TP	SS 304	.012"	.157"	Carbide	40,000	.003"	.079"	23.62	Oil

GRINDING

MODEL	MATERIAL	GRINDING TOOL (DIA x LENGTH)			R.P.M.	DEPTH OF CUT	TOTAL DEPTH	FEED RATE (IPM)	MIST LUBE
		DIA.	LENGTH	MAT'L					
HS-3300TP	Carbide	.315"	—	Diamond	20,000	.0004"	.002"	1.18	Semi Dry Air
HS-2550TP	Pre-Hardened Die Steel	.079"	—	Borazon	40,000	.0004"	—	1.97	Dry Air
HS-600TP	Ceramic	.236"	.236"	Diamond	60,000	.002"	.197"	23.62	Emulsion

LEUTER HI-SPEED HEADS

TORQUE CHART

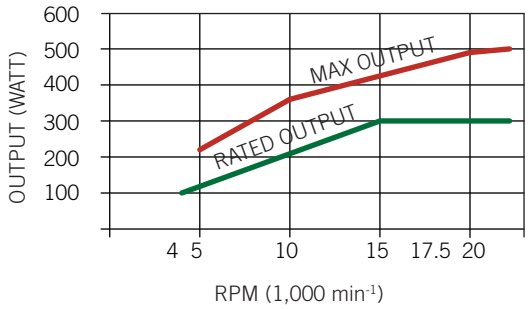

HS-2220TP

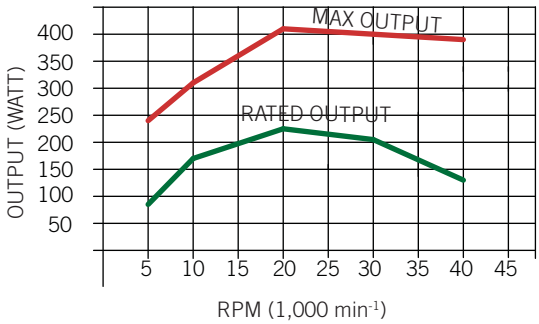

HS-2550TP

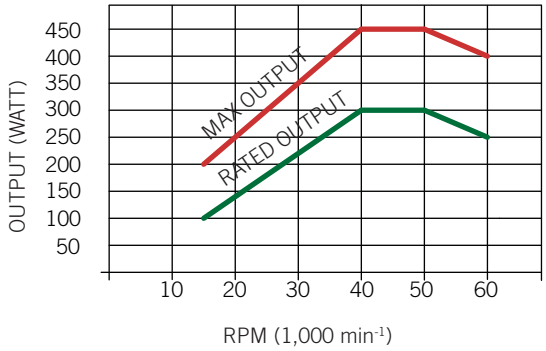

HS-600TP

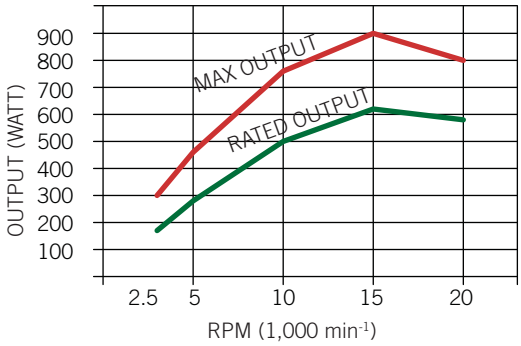

HS-3300TP

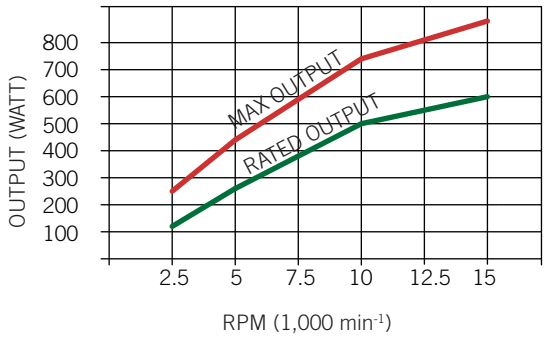

HS-3400TP

RETENTION KNOBS FOR V FLANGE TOOL SHANK

FIG. 1

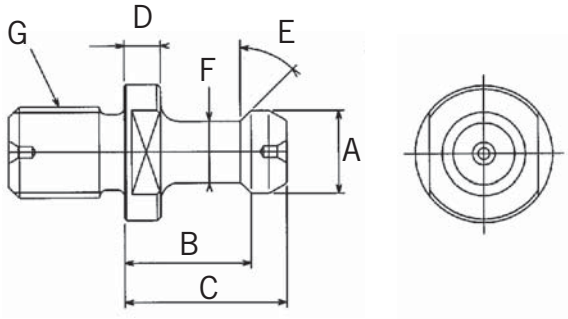

FIG. 2

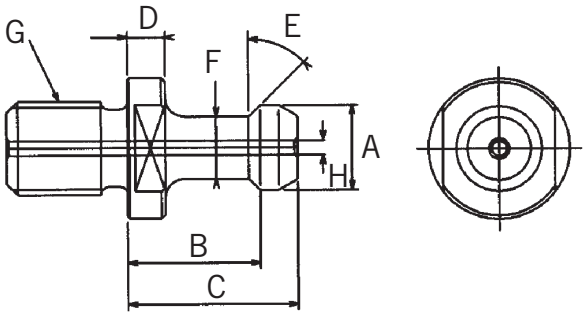

FIG. 3

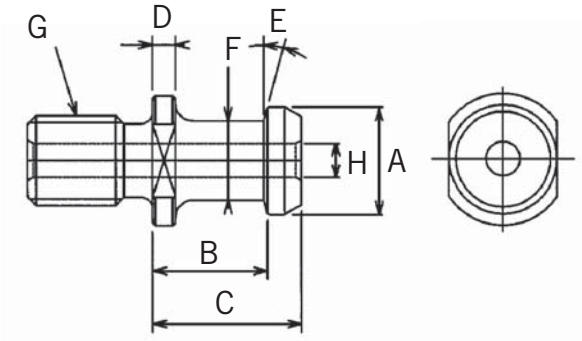

FIG. 4

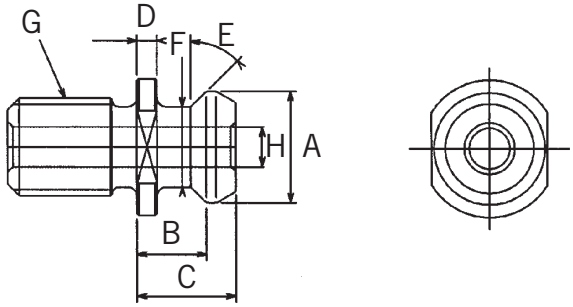

TAPER	ORDER NO.	A	B	C	D	E	F	G	H	FIG.
40	1400-10	.59	.99	1.27	.12	45°	.39	5/8-11 UNC	—	1
	1400-10CH*					45°			.17	2
	1400-20					30°			—	1
	1400-30	.59	.99	1.27	.24	90°	.39			
	1400-50	.59	.71	.98	.20	90°	.39			
	1400-80*	.75	.79	1.02	.16	15°	.55		.23	3
	1400-US STD*	.74	.44	.64	.12	45°	.49		.27	4
50	1500-10	.91	1.38	1.77	.39	45°	.67	1-8 UNC	—	1
	1500-10CH*					45°			.31	2
	1500-20					30°			—	1
	1500-30	.91	1.39	1.78	.40	90°	.67			
	1500-50	.95	.91	1.22	.20	90°	.71			
	1500-US STD*	1.14	.70	1.00	.20	45°	.82		.49	4

Note: * means the coolant thru body. All coolant thru collets come with o-rings.
Note: Provide dimensions A through H if your retension knobs are not listed.
Note: Specify machine model when ordering.

RETENTION KNOBS FOR BT FLANGE TOOL SHANK

FIG. 1

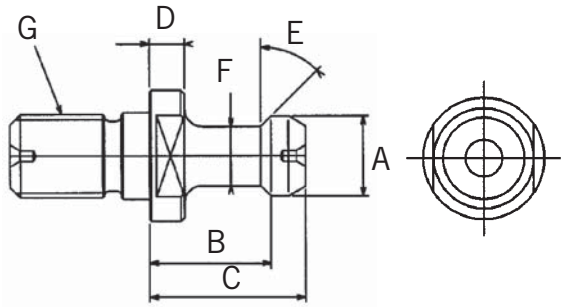

FIG. 2

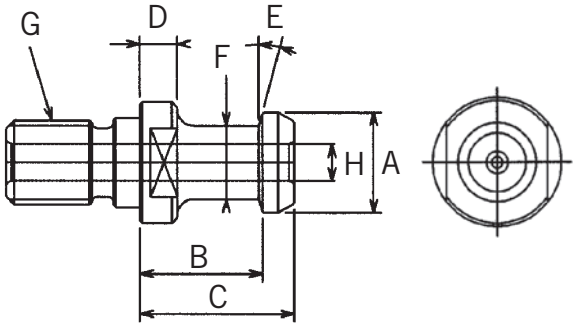

FIG. 3

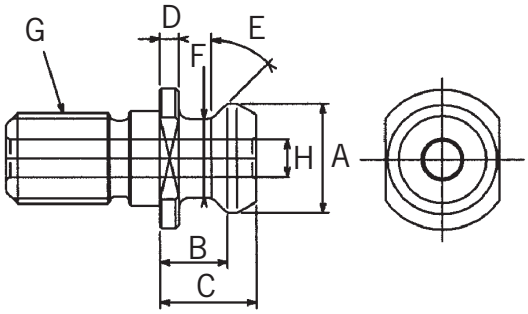

TAPER	ORDER NO.	A	B	C	D	E	F	G	H	FIG.
30	2300-10	.43	.71	.91	.20	45°	.28	M12X1.75	.49	1
	2300-20		.71	.91		30°			—	
	2300-50		.59	.79		90°				
40	2400-10	.59	1.10	1.38	.20	45°	.39	M16X2.0	—	1
	2400-20				.24	30°				
	2400-30				.24	90°				
	2400-40*	.75	.91	1.14	.24	15°	.55		.23	2
	2400-US STD*	.74	.55	.75	.12	45°	.49		.27	3
	2400-US STD SHORT*	.74	.44	.64	.12	45°	.49		.27	3

Note: * means the coolant thru body.
Note: Provide dimensions A through H if your retension knobs are not listed.
Note: Specify machine model when ordering.

PARTS AND ACCESSORIES

PARTS FOR SHELL END MILL ARBORS

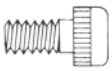
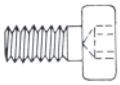

ARBOR SIZE	ORDER NO.	DRIVE KEY SIZE	ORDER NO.	CAP SCREW SIZE	ORDER NO.	ARBOR SCREW SIZE	SHELL END MILL ARBORS
3/4	2-0002A	5/16 x 6.5mm x 10.5mm	2-0013A	M3 x 8mm	2-0023	3/8 - 24 x 25mm	140-206-2, -4, -6 150-206-2, -4, -6
	2-0002B	5/16 x 9mm x 13mm	2-0013B	M3 x 10mm			150-206-8 & -10
1	2-0003A	3/8 x 8mm x 13mm	2-0014A	M4 x 10mm	2-0024	1/2 - 20 x 25mm	140-208-2, -4, -6 150-208-2, -4, -6
	2-0003B	3/8 x 10mm x 16.5mm	2-0014B	M4 x 12mm			150-208-8 & -10
1-1/4	2-0004A	1/2 x 10mm x 16.5mm	2-0015	M5 x 12mm	2-0025	5/8 - 18 x 30mm	140-210-2, -4, 150-210-2, -4, -6
	2-0004B	1/2 x 12mm x 22mm					150-210-8 & -10
1-1/2	2-0005A	5/8 x12mm x 20mm	2-0016A	M6 x 16mm	2-0026	3/4 - 16 x 35mm	140-212-2 & -4
	2-0005B	5/8 x 12mm x 26mm					150-212-2, -4, -6 & -8
	2-0005C	5/8 x 18mm x 27mm	2-0016B	M6 x 20mm			150-212-12

SET SCREWS FOR STANDARD END MILL HOLDERS

SIZE	STANDARD HOLDER	ORDER NO.	SET SCREW SIZE	SIZE	STANDARD HOLDER	ORDER NO.	SET SCREW SIZE
1/8	299	3-0009	#10 - 24 x 8mm	3/4	306	3-0060	5/8 - 11 x 12mm
3/16	300	3-0010	1/4 - 20 x 6mm	7/8	307	3-0070	5/8 - 11 x 16mm
1/4	301	3-0010	1/4 - 20 x 6mm	1	308	3-0080	3/4 - 10 x 17mm
5/16	302	3-0020	5/16 - 18 x 9mm	1-1/4	310	3-0080	3/4 - 10 x 17mm
3/8	303	3-0030	3/8 - 16 x 12mm	1-1/2	312	3-0080	3/4 - 10 x 17mm
1/2	304	3-0040	7/16 - 14 x 13mm	2	316	3-0160	1 - 14 x 20mm
5/8	305	3-0050	9/16 - 12 x 13mm				

PARTS AND ACCESSORIES

SET SCREWS FOR STUBBY END MILL HOLDERS

SIZE	HOLDER	ORDER NO.	SET SCREW SIZE
1/2	304	3-0104	7/16 - 14 x 13mm
5/8	305	3-0105	9/16 - 12 x 13mm
3/4	306	3-0106	5/8 - 18 x 14.5mm
1	308	3-0108	5/8 - 18 x 11mm
1-1/4	310	3-0110	5/8 - 18 x 8.5mm

SET SCREWS FOR END MILL HOLDER EXTENSIONS

SIZE	HOLDER	ORDER NO.	SET SCREW SIZE
1/8	299	3-1299	#10 - 24 x 5mm
3/16	300	3-1300	1/4 - 20 x 5mm
1/4	301	3-1301	1/4 - 20 x 6mm
5/16	302	3-1302	5/16 - 18 x 6mm
3/8	303	3-1303	5/16 - 18 x 8mm
1/2	304	3-1304	5/16 - 18 x 8mm

BACK-UP SCREWS

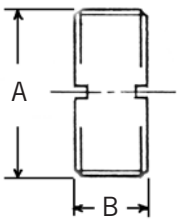

FOR ER MICRO MILLING CHUCKS

CHUCK SIZE	ORDER NO.	A	B
#101	0-1018	M6 x 1.0	.472
#102	0-1028	M8 x 1.0	.591
#103	0-1038	M11 x 1.0	.472
#107	0-1078	M15 x 1.5	.944
#108	0-1088	M18 x 1.5	.944
#109	0-1098	M22 x 1.5	.944
#111	0-1118	M28 x 1.5	.944

FOR TG COLLET CHUCKS

CHUCK SIZE	ORDER NO.	A	B
#100	0-1008	1-1/8 – 16	.472

PARTS AND ACCESSORIES

BACK-UP SCREWS WITH COOLANT SEAL PAD

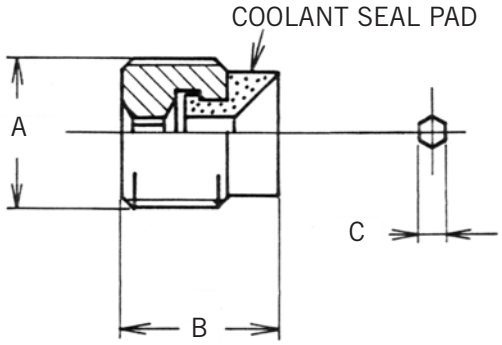

FOR ER AND TG COLLET CHUCKS

CHUCK SIZE	ORDER NO.	A	B	C
#100	1-0100	1-1/8-16 (L)	.984	5/32
#103	1-0103	M11 x 1.0 (R)	.591	3/32
#107	1-0107	M15 x 1.5 (R)	.709	1/8
#108	1-0108	M18 x 1.5 (R)	.748	1/8
#109	1-0109	M22 x 1.5 (R)	.748	5/32
#111	1-0111	M28 x 1.5 (R)	.748	5/32

Note: Coolant seal pad is made of Urethane rubber.
Note: Max. pressure is 400 PSI.

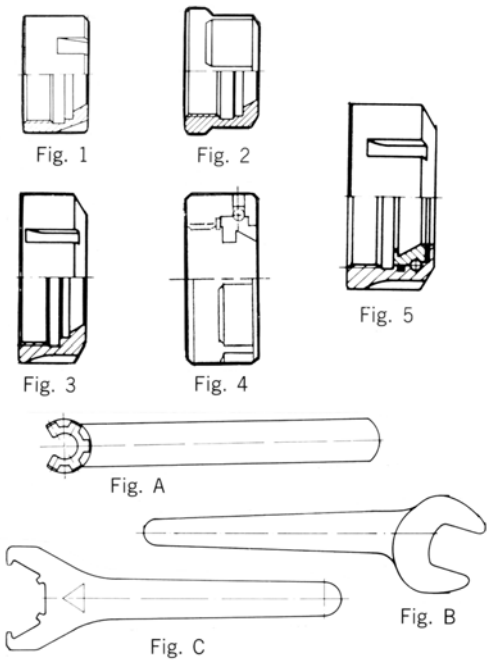

NUTS AND WRENCHES FOR ER MICRO MILLING CHUCKS

CHUCK SIZE	ORDER NO. NUT	FIG.	ORDER NO. WRENCH	FIG.
#101	0-1101	1	10908	A
#102	0-1102	2	10911	B
#103	0-1103	2	10916	B
#103	0-2103	4	10918	—
#107	0-1107	2	10920	B
#108	0-1108	3	10925	C
#108	0-2108	5	10925	C
#109	0-1109	3	10932	C
#111	0-1111	3	10940	C

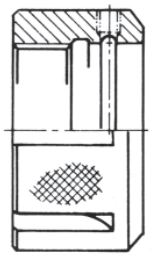

#100

NUTS FOR TG COLLET CHUCKS

CHUCK SIZE	#100	DESCRIPTION
#100	0-1000	Complete Nut

PARTS AND ACCESSORIES

WRENCHES FOR TG100 COLLET CHUCKS AND MILLMAX MILLING CHUCKS

10011, 10106, 10110

ORDER NO.	CHUCK SIZE
10011	#100 (TG100)
10106	#106
10110	#110

NUTS AND WRENCHES FOR MST CTA/CTH COLLET CHUCKS

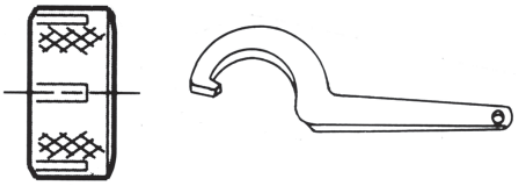

CHUCK SIZE	NUT ORDER NO.	WRENCH ORDER NO.
#113	0-1113	10113
#116	0-1116	10116
#118	0-1118	10118

BACK-UP SCREWS FOR MST CTA/CTH COLLET CHUCKS

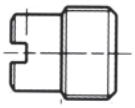

CHUCK SIZE	ORDER NO.	SIZE
#113	0-2113	M14 X .87
#116	0-2116	M24 X 1.06
#118	0-2118	M28 X 1.06

WRENCHES FOR MST DETa-1 COLLET CHUCKS (A-TYPE)

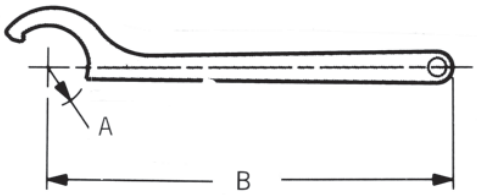

CHUCK SIZE	ORDER NO.	A	B
#070	10070	.75	7.05
#120	10120	.89	8.86

PARTS AND ACCESSORIES

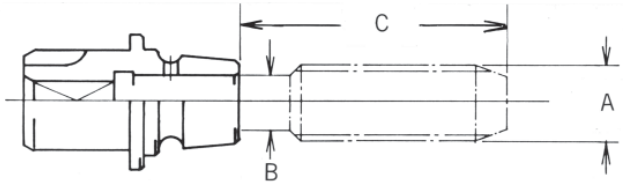

TAP ADAPTERS FOR SYNCHRO TAP HOLDERS

SIZE	ORDER NO.	TAP SIZE	B	C
#1	1-002-004	#4	.141	1.136
	1-002-004	#5	.141	1.199
	1-002-004	#6	.141	1.261
	1-002-008	#8	.168	1.324
	1-002-010	#10	.194	1.495
	1-002-012	#12	.220	1.464
	1-002-013	1/4	.255	1.558
#2	1-005-014	5/16	.318	1.556
	1-005-015	3/8	.381	1.634
	1-005-016	7/16	.323	1.766
	1-005-017	1/2	.367	1.963
	1-005-018	9/16	.429	2.031
	1-005-019	5/8	.480	2.187
	1-005-020	1/8 PT. SS	.3125	1.120
	1-005-021	1/8 PT. LS	.4375	1.120
#3	1-007-023	11/16	.542	2.202
	1-007-024	3/4	.590	2.421
	1-007-025	13/16	.652	2.640
	1-007-026	7/8	.697	2.796
	1-007-027	15/16	.760	2.817
	1-007-028	1	.800	2.974
	1-007-029	1/4 PT	.5625	1.213
	1-007-030	3/8 PT	.7000	1.275
	1-007-031	1/2 PT	.6875	1.516

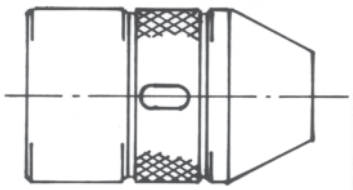

NUTS AND WRENCHES FOR SYNCHRO TAP HOLDERS

HOLDER SIZE	NUT ORDER NO.	WRENCH ORDER NO.
#1	0-0002	10002
#2	0-0005	10005
#3	0-0007	10007

HORIZONTAL & VERTICAL TOOL LOCKING FIXTURES

- **HORIZONTAL AND VERTICAL USE ON THE WORK BENCH.**
- **STEEL BODY, AND ALUMINUM TOOL POT ACCEPTS THE HOLDER AT ITS LARGEST O.D. OF TAPER AND FLANGE. ABSOLUTELY NO CONTACT ON THE TAPER!**
- **EASY TIGHTENING A CLAMP BOLT PROVIDES THE MOST POSITIVE LOCK WITH THE TOOL HOLDER.**
- **EASY TO CHANGE THE CUTTER OR RETENTION KNOB IN THE MOST STABLE CONDITION.**

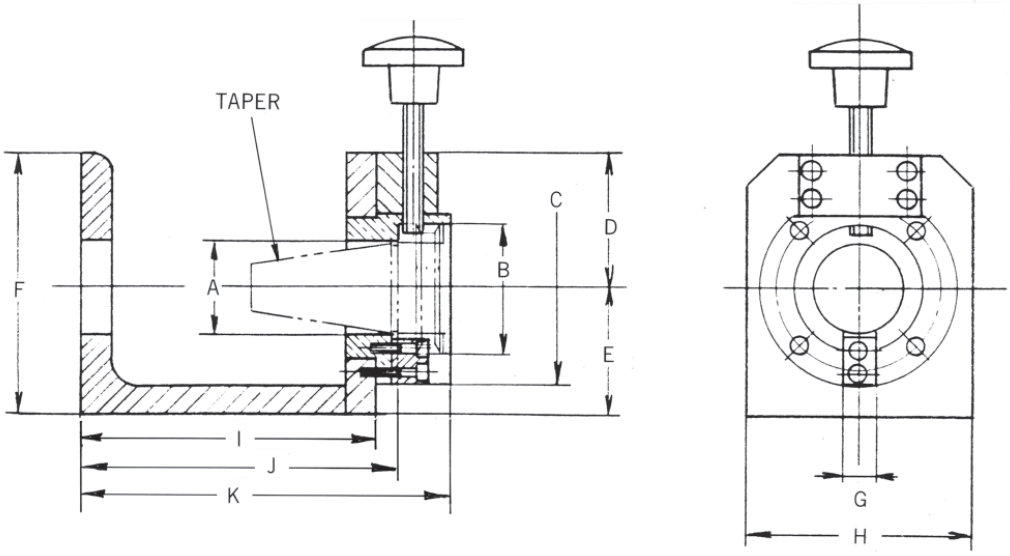

V FLANGE TOOL SHANK

TAPER	ORDER NO.	A	B	C	D	E	F	G	H	I	J	K
40	40140	1.81	2.51	3.74	2.38	2.50	5.11	.629	4.33	5.70	6.10	6.73
50	50150	2.75	3.90	5.11	3.38	3.50	6.88	1.000	5.90	7.48	7.87	8.50

BT FLANGE TOOL SHANK

TAPER	ORDER NO.	A	B	C	D	E	F	G	H	I	J	K
30	30240	1.26	1.81	3.74	2.62	2.50	5.12	.63	4.33	5.71	6.10	6.89
40	40240	1.81	2.49	3.74	2.38	2.50	5.11	.63	4.33	5.70	6.10	7.08

The PWB Swiss Tool Boy

- **INTERCHANGEABLE TAPER MODULES**
- **EASY TO USE**
- **QUICK TOOL MOUNTING IN ONE SET-UP**
- **MINIMUM CLAMPING FORCE REQUIRED**
- **COMPACT DESIGN**

DIN 69893
HSK - Form A

DIN 69871/DIN 2080,
JIS B 6339 (MAS-BT)
ANSI-CAT-V-Flange

Note: Taper module in various shank types available upon request.

The PWB Swiss Tool Boy

TOOL BOY
bolted down on the work bench

VERTICAL POSITION
Put toolholder in and clamp securely

HORIZONTAL POSITION
Tighten or loosen the tool

VERTICAL POSITION
Put a retention knob and tighten securely

ORDER NO.	POT TAPER
56030	30
56040	40
56050	50

Note: Base plate 4.73 x 6.3
Note: Accepts DIN 2080/69871, BT and V flange tool shanks
Note: Special taper pots (HSK, VDI, CAPTO Shanks) are available upon request.

The TOOL BOY is a unique device for assembling and disassembling cutting tools on tool holders. The head can be rotated 360˚, allowing convenient access for all operations in one set-up.

The TOOL BOY is ideal for mounting on tool carts. The tools can be rotated to the horizontal plane and tightened in a downward direction.

The TOOL BOY can be secured in the horizontal position for tightening the tool which requires substantially less force to achieve optimum tightening torque.

HIGH PRECISION TEST BARS

- **OVER 90% TAPER CONTACT FOR 40 AND 50 TAPERS**
- **ROUNDNESS WITHIN .000024"**
- **SURFACE ROUGHNESS WITHIN 6 MICRO INCH**
- **MADE FROM CHROME MOLYBDENUM ALLOY STEEL TREATED AT SUB-ZERO TEMPERATURE**
- **CASE HARDENED TO HRC 55-60 DEGREE WITH .031" TO .039" DEEP**
- **A COMPLETE WITH STORAGE CASE**

ORDER NO.	TAPER	DIAMETER	LENGTH	FIG.
12640	40	1.25	8	1
12650	50	2.00	12	1
12063	A63	1.25	8	2
12100	A100	2.00	12	2

Note: Draw bar thread, #12640 with 5/8"-11 and #12650 with 1"-8.
Note: Each Test Bar comes with inspection certificate.

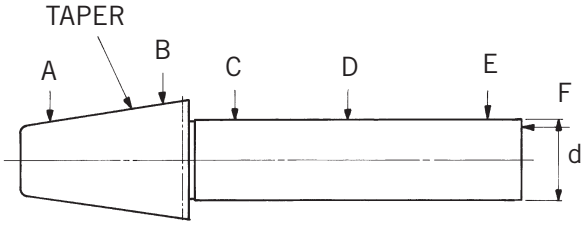

FIG. 1

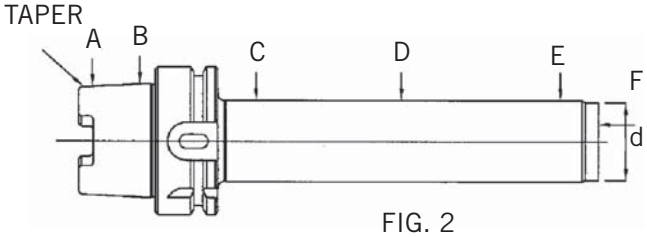

FIG. 2

ITEM	DESCRIPTION OF INSPECTION	GUARANTEED ACCURACY
1	Taper Contact	Over 90%
2	Run-out at A Between Centers	.000079
3	Run-out at B Between Centers	.000079
4	Run-out at C Between Centers	.000079
5	Run-out at D Between Centers	.000120
6	Run-out at E Between Centers	.000120
7	Diameter d	1.2500 ± .0002 for #40, A63 2.0000 ± .0002 for #50, A100
8	Run-out of End Face at F	.00012
9	Run-out at E Relative to Taper Shank	.00012

ZERO SETTERS

- **EASY AND ACCURATE OFF-SETTING OF Z AXIS DISTANCE**
- **ADDED MASTER CAP ENABLES AN ABSOLUTE GAGE LENGTH OF 3"**
- **DIAL GAGE IN .001" READING FOR ACCURATE SETTING**
- **MADE OF TOOL STEEL, HARDENED AND PRECISION GROUND**

ORDER NO.	A	B	READING
13000	3.000	2.52	.001"

OPERATIONS

No. 1

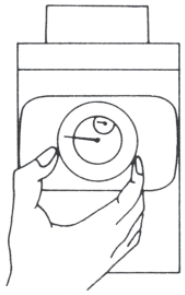

Mount the master cap and set the dial gage at the zero to set up the absolute length.

No. 2

Remove the master cap and set the zero setter on the machine table

No. 3

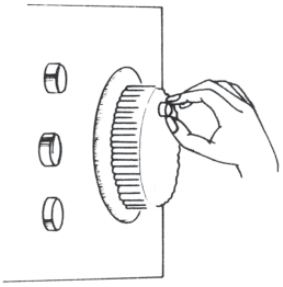

Operate the pulse generator to bring the spindle down.

No. 4

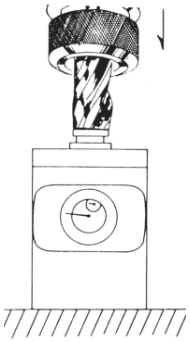

Let the cutter tip contact the measuring surface, and when the reading is zero, that is the absolute length.

YUKEN
KIRIKO CHIP COMPACTOR

- A QUIET, HYDRAULIC POWERED CHIP COMPACTOR
- COMPACT DESIGN FOR MINIMUM FLOOR SPACE
- UP TO 1/40 VOLUME REDUCTION OF ORIGINAL METAL CHIPS OR SHAVINGS INTO BRIQUETTES
- SEPARATES COOLANT DURING COMPRESSION
- REDUCES STORAGE SPACE FOR SCRAP METAL AND SAVES TRANSPORTATION COSTS
- MEETS ISO14000 REQUIREMENT

YUKEN
KIRIKO CHIP COMPACTOR

BASIC OPERATING CYCLE

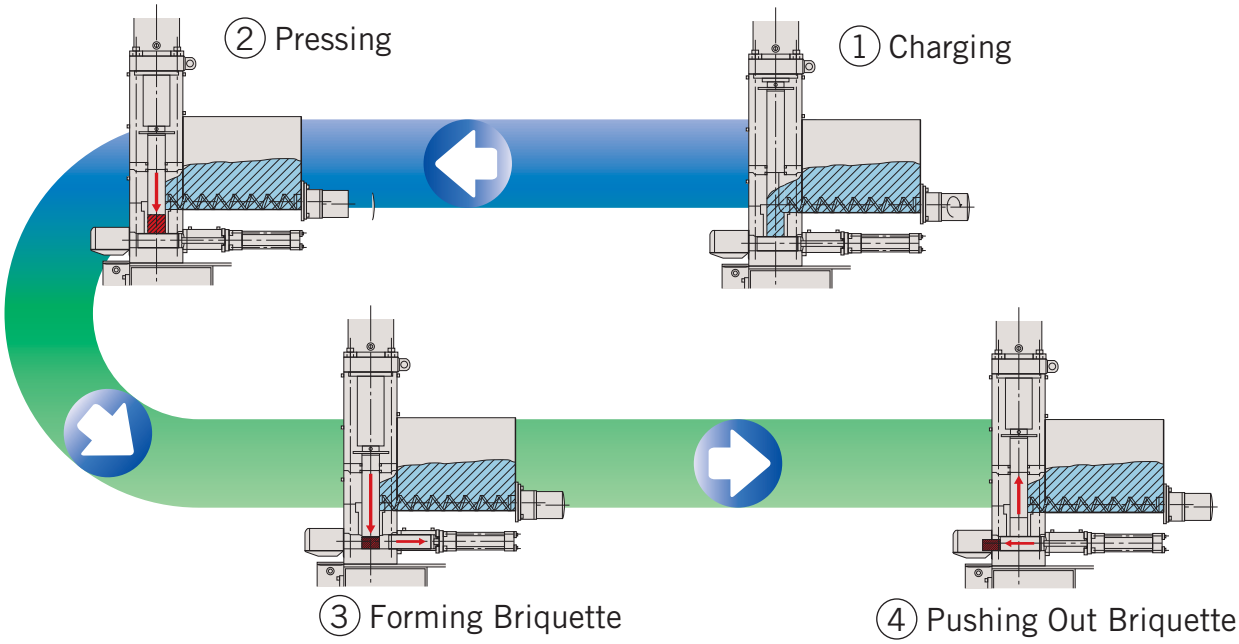

UPTO 1/40 OF THE ORIGINAL VOLUME!

YUKEN KIRIKO CHIP COMPACTOR
YK-40V & YK-80V, STANDARD VERTICAL MODELS

SPECIFICATIONS

MODEL	YK-40V-03C••	YK-40V-10C••
Briquette Dims.	ϕ5.12 X 2.5	ϕ2.76 X 2.5
Compression Press.	4,206 PSI	14,213 PSI
Ave. Operating Time	26 SEC*	
Main Power	3,700 W-4P	
Charging Power	100 W-4P	
Voltage	200V/220V (50/60Hz) 3 PHASE	
Weight (lb.)	1,543	

Note: The cylinder output is 390kN.
Note: * means operating time per dry cycle excluding charging time.
Note: •• means add optional accessories such as LID (lid for hopper), B (bridge breaker), and G (grinding sludge).
Note: An optional lid is recommended when manually feeding chips
Note: Pre-compression type is available on 03 model (4,206 psi) only.

SPECIFICATIONS

MODEL	YK-80V-06••	YK-80V-10••	YK-80V-20••
Briquette Dims.	ϕ5.12 X 2.5	ϕ3.94 X 2.5	ϕ2.76 X 2.5
Compression Press.	8,557 PSI	14,213 PSI	28,427 PSI
Ave. Operating Time	30 SEC*		
Main Power	3,700 W-4P		
Charging Power	100 W-4P		
Voltage	200V/220V (50/60Hz) 3 PHASE		
Weight	2,645 LB.		

Note: The cylinder output is 780kN.
Note: * means operating time per dry cycle excluding charging time.
Note: •• means add optional accessories such as LID (lid for hopper)
Note: An optional lid is recommended when manually feeding chips

YUKEN KIRIKO CHIP COMPACTOR
YK-40V & YK-80V, STANDARD VERTICAL MODELS

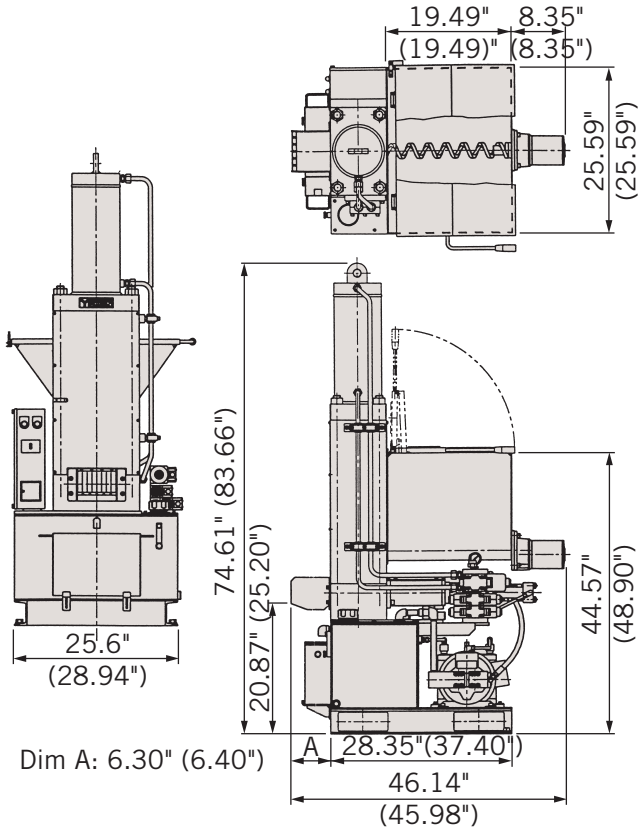

PART NUMBERS WITH ACCESORIES

PART NO.	DESCRIPTION
YK40V-03	Std unit, 4,206 PSI
YK40V-03 LID	Std & lid
YK40V-03B	Std w/bridge breaker
YK40V-03B LID	Std w/bridge breaker & lid
YK40V-03G	Std w/grinding sludge
YK40V-03G LID	Std w/grinding sludge & lid

PART NO.	DESCRIPTION
YK40V-10	Std unit, 14,213 PSI
YK40V-10 LID	Std & lid
YK40V-10B	Std w/bridge breaker
YK40V-10B LID	Std w/bridge breaker & lid
YK40V-10G	Std w/grinding sludge
YK40V-10G LID	Std w/grinding sludge & lid

PART NO.	DESCRIPTION
YK80V-06	Large unit, 8,557 PSI
YK80V-10	Large unit, 14,213 PSI
YK80V-20	Large unit, 28,427 PSI
YK80V-06 LID	Large unit w/lid
YK80V-10 LID	
YK80V-20 LID	

Note: YK80V dimensions in ( ).

YUKEN KIRIKO CHIP COMPACTOR
YK-40V, STANDARD VERTICAL MODELS WITH CRUSHER

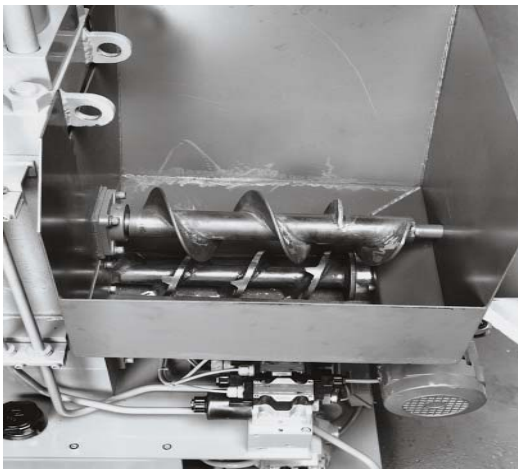

Photograph of Standard Crusher (C)

SPECIFICATIONS

MODEL	YK-40V-03C••	YK-40V-10C••
Briquette Dimensions	ϕ5.12 X 2.5	ϕ2.76 X 2.5
Compression Pressure	4,206 PSI	14,213 PSI
Ave. Operating Time	26 SEC*	
Main Power	3,700 W-4P	
Charging Power	100 W-4P	
Voltage	200V/220V (50/60Hz) 3 PHASE	
Weight (lb.)	1,873	

Note: The cylinder output is 390kN.
Note: * means operating time per dry cycle excluding charging time.
Note: The Crusher has 3 types: Standard, Push-in type, & Heavy Duty Push-in type
Note: •• means add optional accessories such as LID (lid for hopper)
Note: An optional lid is recommended when manually feeding chips
Note: Pre-compression type is available on 03 model (4,206 psi) only.

YUKEN KIRIKO CHIP COMPACTOR
YK-40V, STANDARD VERTICAL MODELS WITH CRUSHER

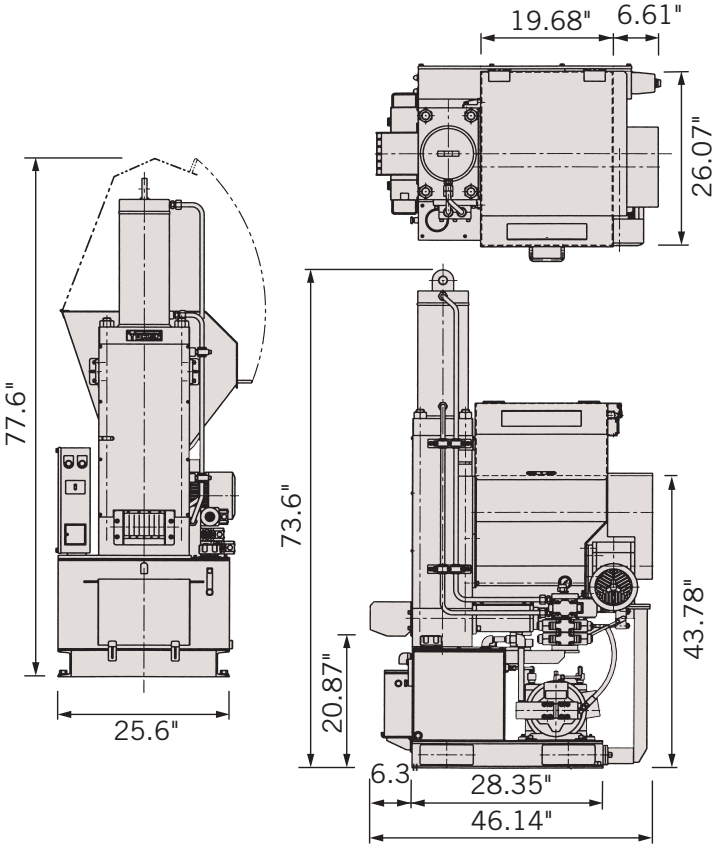

PART NUMBERS WITH ACCESORIES

PART NO.	DESCRIPTION
YK40V-03C LID	Standard w/crusher & lid
YK40V-03CR LID	Standard w/push-in type crusher & lid
YK40V-03CS LID	Standard w/heavy duty push-in type crusher & lid

PART NO.	DESCRIPTION
YK40V-10C LID	Standard w/crusher & lid
YK40V-10CR LID	Standard w/push-in type crusher & lid
YK40V-10CS LID	Standard w/heavy duty push-in type crusher & lid

Shaving Bridge Breaker (B)

Push-In Type Crusher (CR)

Heavy Duty Push-In Type Crusher (CS)

YUKEN KIRIKO CHIP COMPACTOR - CHIP SELECTION CHART

CHIP TYPE	CHIP DRAWING	MAX SIZE (GAL)	YK-40V										
			3	3B	3P	3C	3CR	3CS	10	10B	10C	10CR	10CS
Ribbon		52.8				◎	◎	◎			○	○	○
Tangled	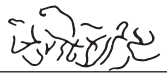	—			◎	◎	◎	◎			○	○	○
Smooth Spirals		52.8	○		◎	◎	◎	◎			○	○	◎
Aslant Spiral		52.8	○		◎	◎	◎	◎			○	○	◎
Long, Cylindrical Spirals		26.4	◎		◎	○	○	◎			◎	◎	◎
Spiral Fragments		13.2	◎	◎		○	○	◎			◎	◎	◎
Short Cylindrical Spirals		7.9	○	◎		○	○	○	◎	○	○	○	
Vertical Spirals		2.6	○	○		○	○	○	◎	○	○	○	
Frizzy		5.3							◎	○	○	○	
Chips		1.3							○	◎	○	○	

CHIP TYPE	CHIP DRAWING	MAX SIZE (GAL)	YK-80V					
			6	6B	10	10B	20	20B
Ribbon		52.8	○					
Tangled	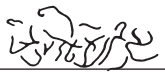	—	○					
Smooth Spirals		52.8	◎					
Aslant Spiral	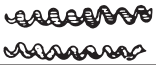	52.8	◎	○	○	○	◎	○
Long, Cylindrical Spirals		26.4	○	○	◎	○	◎	○
Spiral Fragments		13.2	○	○	◎	○	◎	○
Short Cylindrical Spirals		7.9	○	○	◎	○	◎	○
Vertical Spirals		2.6			○	◎	○	◎
Frizzy		5.3						
Chips		1.3						

BISHAMON® HYDRAULIC POWER LIFTER & CHIP CART

Photo shown with optional tilting basket

SPECIFICATIONS FOR HYDRAULIC POWER LIFTER

MODEL NO.	HTR25
Capacity (lb.)	551
Max Lift (inches)	59
Lifting Time (sec)	27
Tiling Time (sec)	10
Max Tilt (degrees)	62
Voltage	AC100V, 400W
Weight (lb.)	551

Photo of Chip Cart

SPECIFICATIONS FOR CHIP CART

MODEL NO.	DS15
Capacity (lb.)	331
Dimensions (inches)	32 x 21 x 40
Volume of Basket (gal)	32
Weight (lb.)	79

5C SERIES

Page 177

TC-5C-1/TC100
TC-5C-1A/TC100A
TC-5C-2A/TC2100A
TC-5C-3A/TC3100A

MULTI SPINDLE

Page 194

TM-100-2R/TM2100
TM-100-3R/TM3100
TM-160-2R/TM2160
TM-160-3R/TM3160

MR SERIES

Page 182

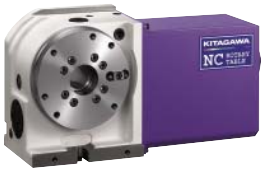

MR120
MR160
MR200
MR250
MR320

TILTING SERIES

Page 199

TT101, TT140
TT(TW)182
TT(TTS)251
TT(TTS)321
TW2180

TMX & TRX SERIES

Page 188

TMX160
TMX200
TMX250
TRX320

MAC MINI i

Page 214

TR SERIES

Page 190

TR401
TR500
TR630

MACDEX SERIES

Page 217

RS-5C-1/TCM100
RS-5C-1A/TCM100A
RS-5C-2A/TCM2100A
RS-5C-3A/TCM3100A

TBX SERIES

Page 192

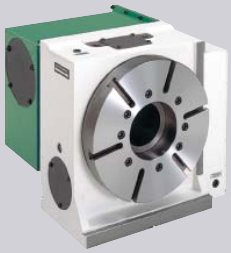

TBX160
TBX200
TBX250
TBX320

MACDEX SERIES

Page 220

RS100/RSM100

MACDEX SERIES Page 222

MRM120
MRM160
MRM200
MRM250
MRM320

DM SERIES Page 224

DM100

TAILSTOCKS Page 226

TAILSUPPORT Page 229

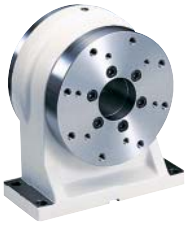

SCROLL CHUCKS Page 232

AIR BOOSTERS Page 233

AIR CHUCKS Page 234

ROTARY JOINTS Page 235

AC SERVO MOTOR CHART Page 212

ACCESSORY CHART Page 236

KITAGAWA

FOR MAXIMUM PRODUCTION, TOOL UP WITH THE BEST

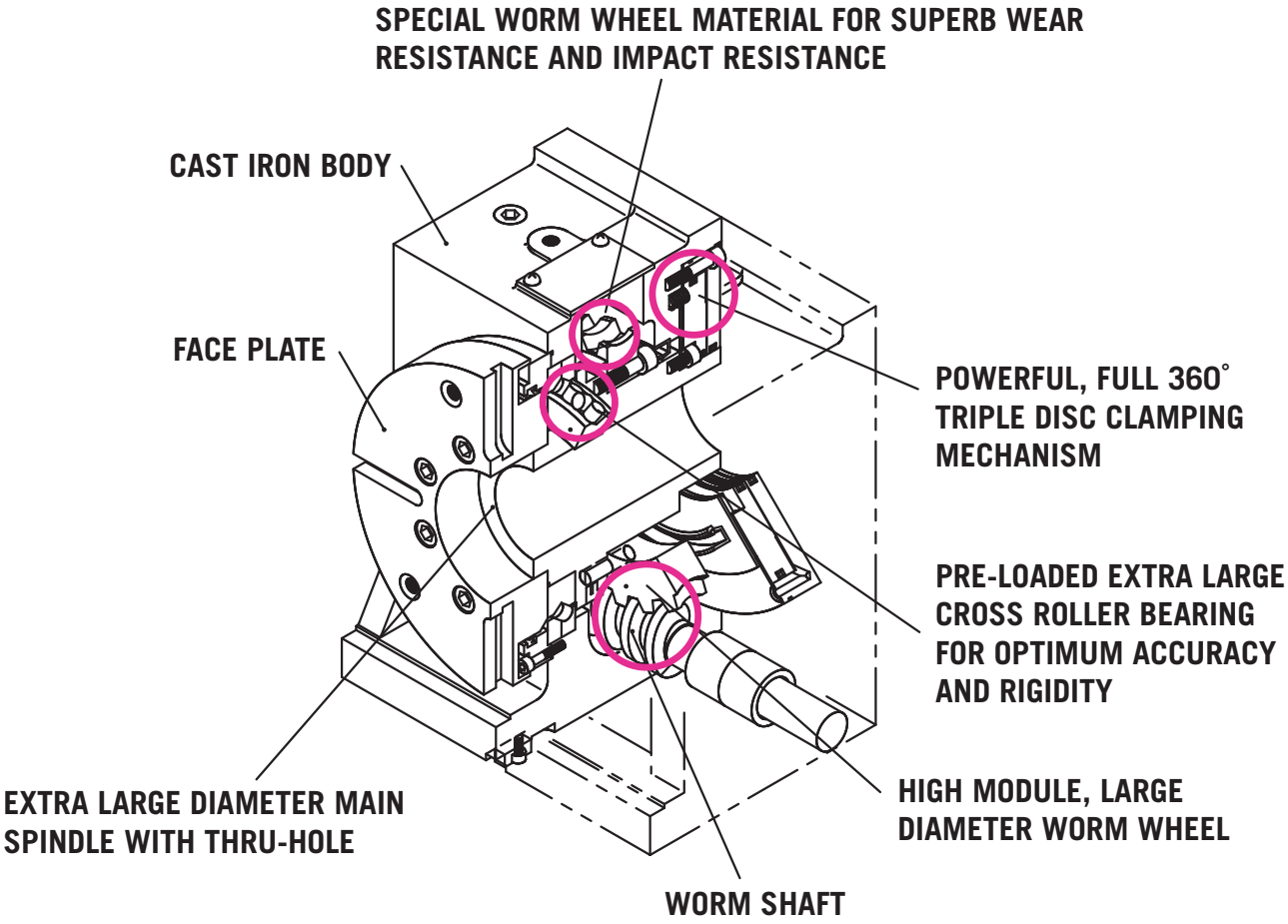

KITAGAWA
NC ROTARY TABLES

FEATURES

- **DURABLE DOUBLE-LEAD WORM GEAR FOR HEAVY MILLING**
  The bigger worm gear module with its larger diameter tremendously increases the gear engagement between worm shaft and worm wheel and decreases area pressure at contact, which results in more driving torque and maximum protection against wear

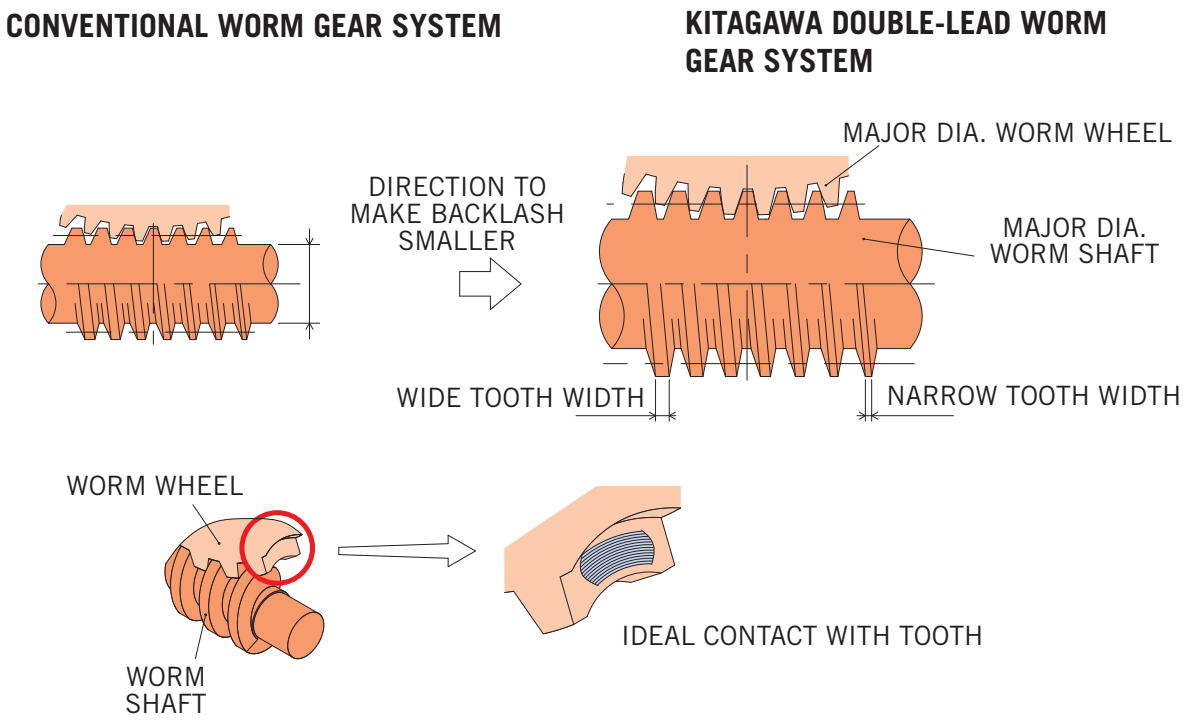

- **SUPERB WEAR RESISTANCE**
  Composition of the special material of the worm wheel has a hard inter metallic bonding compounds, which significantly impacts the resistance

KITAGAWA
NC ROTARY TABLES

- **PRE-LOADED EXTRA LARGE CROSS ROLLER BEARING FOR OPTIMUM ACCURACY AND RIGIDITY**
  The development of a special cross roller bearing not only eliminates radial and thrust play, but also prevents the table from displacement under severe load. Kitagawa's design has longer theoritical bearing positions of a cross roller bearing, which gives a far superior rigidity than a conventional design

SPECIAL CROSS ROLLER BEARING

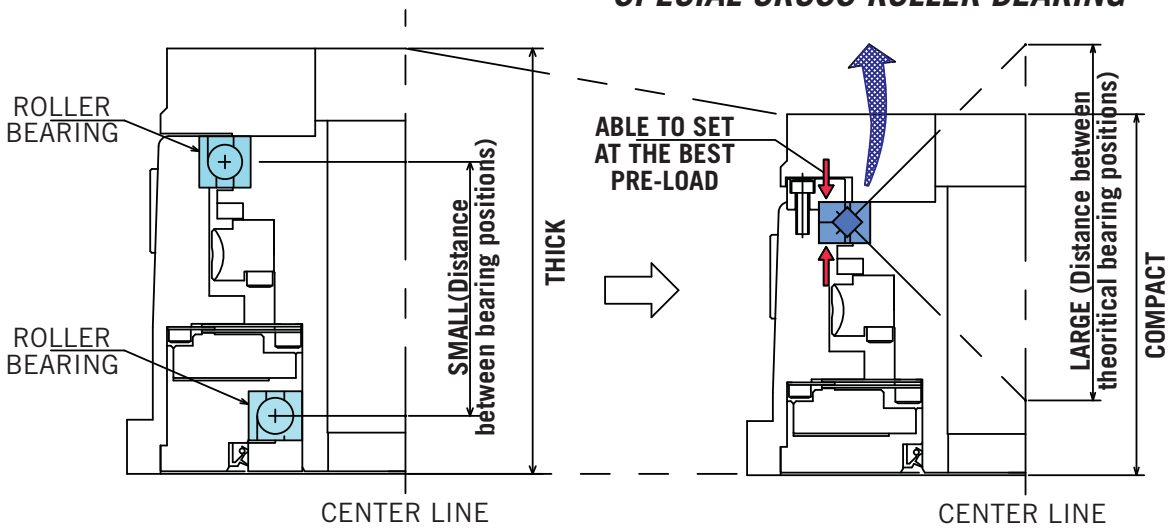

CONVENTIONAL DESIGN ***KITAGAWA DESIGN***

- **POWERFUL, FULL 360˚ TRIPLE DISC CLAMPING**
  4 Friction planes of the triple disc clamping mechanism (pat. pending) amplify the clamping force drastically around the full 360˚

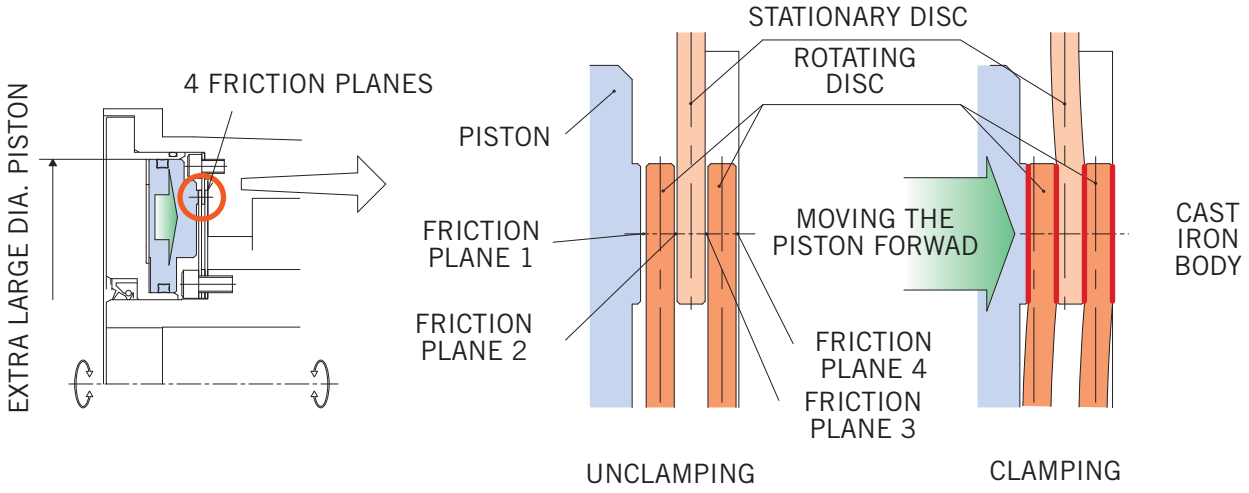

KITAGAWA
NC ROTARY TABLES

- **BUILT-IN AIR BOOSTERS**
  Built-in air boosters are standard on all X-Series models for optimum hydraulic clamping pressure

- **GUARANTEED ACCURACY WITHIN 15 SECONDS**
  Improved guaranteed accuracy within 15 seconds with repeatability ±2 seconds in most models

- **AIR-PURGE**
  Motor covers are air-purged to prevent moisture and foreign materials from entering

- **INDUCTOSYN OR ROTARY SCALE OPTION AVAILABLE**
  Inductosyn or rotary scale option is available for most models. Consult Tecnara Sales Engineers for details

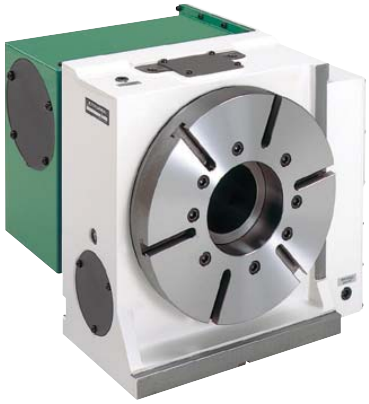

KITAGAWA
5C SERIES NC ROTARY TABLES

MODEL NO.	KIW NO.
TC-5C-1	TC100
TC-5C-1A	TC100A
TC-5C-2A	TC2100A
TC-5C-3A	TC3100A

- **COMPACT & VERSATILE DESIGN**
  SINGLE OR MULTI-AXES DESIGN IN HORIZONTAL AND VERTICAL USE
- **HIGH SPEED INDEXING**
  83.3 RPM FOR TC-5C-1 AND TC-5C-1A
  50 RPM FOR TC-5C-2A AND TC-5C-3A
- **MANUAL AND PNEUMATIC 5C COLLET CLOSERS**
  MAXIMIZE PRODUCTIVITY WITH QUICK AND EASY SETUPS
- **DOUBLE LEAD WORM GEAR**
  OPTIMUM DURABILITY AND HIGHEST ACCURACY IN ITS CLASS
- **BEARING-SUPPORTED WORM SHAFT AT BOTH ENDS**
  ENSURES RELIABLE AND ACCURATE INDEXING
- **AIR-PURGE**
  MOTOR COVER IS AIR-PURGED TO PREVENT MOISTURE AND FOREIGN MATERIALS FROM ENTERING

KITAGAWA
5C SERIES NC ROTARY TABLES

LOAD CAPACITIES

		PERMISSIBLE LOAD		MAX. MACHINE FORCE			*MAX. TORQUE CAP.
		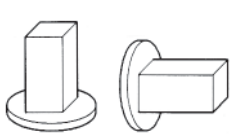		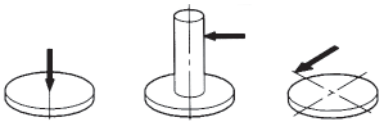			
MODEL	KIW NO.	lb.	lb.	lb.	ft-lb.	ft-lb.	ft-b. w
TC-5C-1	TC100	132	66	1323	145	15	130
TC-5C-1A	TC100A						
TC-5C-2A	TC2100A						
TC-5C-3A	TC3100A						

Note: * means maximum torque capacity of worm gear per 1 rpm table rotaion.

GUARANTEED ACCURACY

ITEM	DESCRIPTION OF INSPECTION	GUARANTEED ACCURACY		
		TC-5C-1 TC-5C-1A	TC-5C-2A TC-5C-3A	
1	Run-out of Table I.D.	.0004	.0004	1 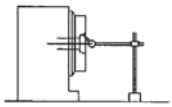
2	Run-out of Table Face	.0008	.0008	2 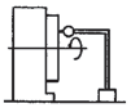
3	Parallelism Betweeen Spindle and Base	.0008	.0008	
4	Indexing Accuracy (second)	45	60	3 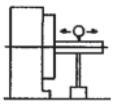
5	Repeatability (second)	±2.5	±2.5	

Note: Measurement is taken at 6" length from face or center of the table.

KITAGAWA
5C SERIES NC ROTARY TABLES

MODEL/KIW NO.		TC-5C-1/ TC100	TC-5C-1A/ TC100A	TC-5C-2A/ TC2100A	TC-5C-3A/ TC3100A
Center Height in Vertical		4.33	4.33	4.33	4.33
Overall Height in Vertical		8.43	8.43	8.27	8.27
Thru Hole Diameter		1.19	1.19	1.19	1.19
AC Servo Motor	Fanuc	α1/5000i	α1/5000i	α2/5000i	α2/5000i
	Meldas	HA-FF33 HF-H75S	HA-FF33	HA-FF63	HA-FF63
	Yasnac	SGMAH-04	SGMAH-04	SGMAH-08	SGMAH-08
	OSP	BL-MC24J	BL-MC24J	BL-MC24J	BL-MC24J
Gear Ratio		1/36	1/36	1/60	1/60
*Maximum R.P.M.		83.3	83.3	50	50
Minimum Resolution (Degree)		0.001	0.001	0.001	0.001
Indexing Accuracy (second)		45	45	60	60
Repeatability (second)		±2.5	±2.5	±2.5	±2.5
Permissible Load (lb.)	Horizontal	132	132	132	132
	Vertical/ Tailstock	66/132	66/132	66/132	66/132
Maximum Work Inertia (lb.-in-sec^2)		2.93	2.93	2.93	2.93
Weight (lb.)		53	60	154	220

Note: * means that maximum RPM is obtained with motor speed at 3,000 rpm.
Note: See accessory chart (p236) for complete listing of optional accessories.
Note: TC-5C-1 furnished with manual 5C collet closer. TC-5C-1A, -2A, and -3A furnished with pneumatic 5C collet closer.

KITAGAWA
5C SERIES NC ROTARY TABLES

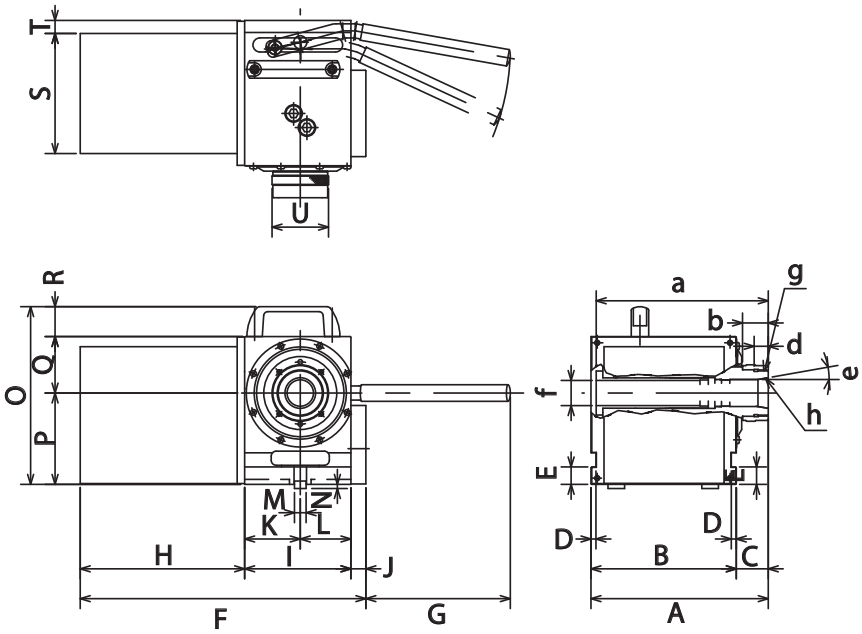

TC-5C-1

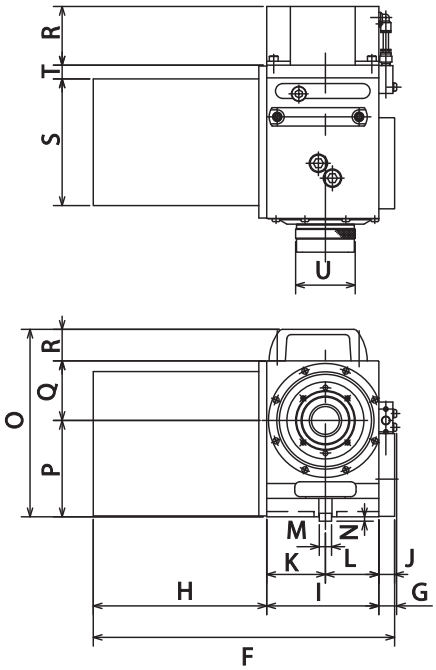

TC-5C-1A

MODEL	KIW NO.	A	B	C	D	E	F	G	H
TC-5C-1	TC100	8.41	6.89	1.52	.24	.83	13.54	7.17	7.80
TC-5C-1A	TC100A	11.04	6.89	1.52	.24	.83	13.54	.80	7.80

I	J	K	L	M	N	O	P	Q	R
5.04	.71	2.64	2.40	.5512 h7	.20	8.43	4.33	2.68	1.42
5.04	.71	2.64	2.40	.5512 h7	.20	8.43	4.33	2.68	2.64

S	T	U	a	b	d	e	f	g	h
5.69	.62	2.68	8.15	1.22	.67	10°	1.19	2 3/16-UNS	5C
5.69	.62	2.68	10.80	1.22	.67	10°	1.19	2 3/16-UNS	5C

KITAGAWA
5C SERIES NC ROTARY TABLE

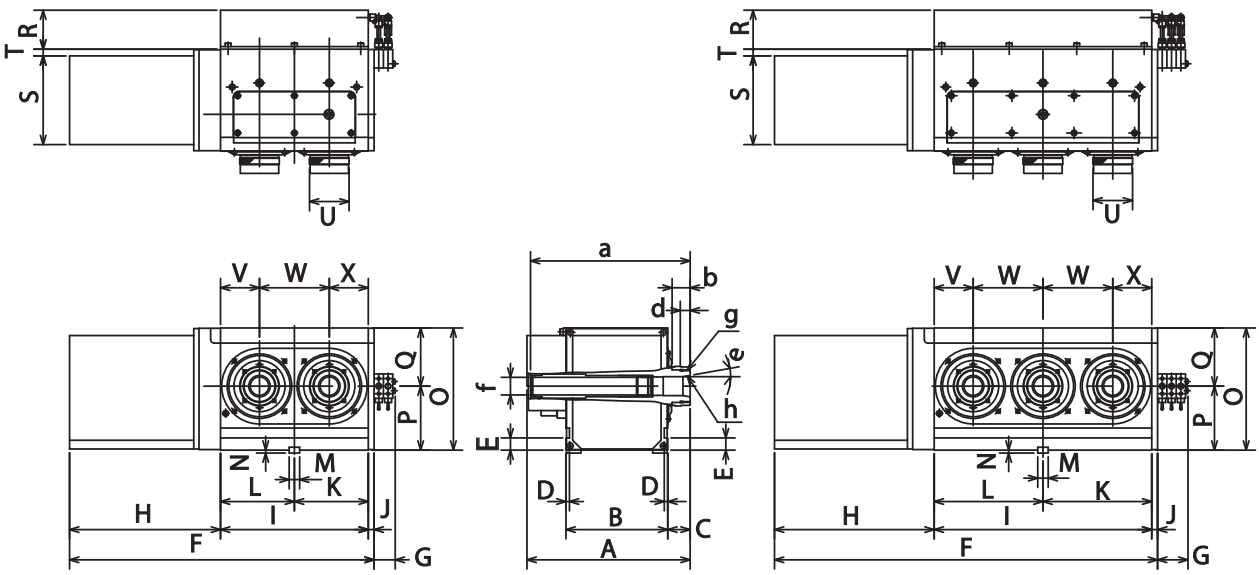

TC-5C-2A

TC-5C-3A

MODEL	KIW NO.	A	B	C	D	E	F	G	H
TC-5C-2A	TC2100A	11.04	6.89	1.52	.24	.83	20.61	1.43	10.22
TC-5C-3A	TC3100A	11.04	6.89	1.52	.24	.83	25.93	2.06	10.81

I	J	K	L	M	N	O	P	Q	R
10.00	.39	5.00	5.00	.7089 h7	.20	8.27	4.33	3.94	2.64
14.72	.39	7.36	7.36	.7089 h7	.20	8.27	4.33	3.94	2.64

S	T	U	V	W	X	a	b	d	e	f	g	h
6.00	.45	2.68	2.64	4.72	2.64	10.80	1.22	.67	10°	1.2	2 3/16-UNS	5C
6.00	.45	2.68	2.64	4.72	2.64	10.80	1.22	.67	10°	1.2	2 3/16-UNS	5C

KITAGAWA
MR SERIES NC ROTARY TABLES

MODELS
MR120R
MR160R
MR200R
MR250R
MR320R

- **ECONOMICALLY PRICED, HIGH PERFORMANCE UNITS**
- **HIGH SPEED TABLE ROTATION**
  50 RPM FOR 120 MODEL
  41.6 RPM FOR 160 MODE
  33.3 RPM FOR 200 AND 250 MODELS
  16.6 RPM FOR 320 MODEL
- **GUARANTEED ACCURACY WITHIN 20 SECONDS IN MOST MODELS**
- **AIR PURGE**
  MOTOR COVER IS AIR-PURGED TO PREVENT MOISTURE AND FOREIGN MATERIALS FROM ENTERING
- **TRIPLE DISC CLAMPING SYSTEM**
  A PATENTED POWERFUL AIR CLAMPING SYSTEM EXERTS THE LARGEST CLAMPING FORCE; THUS ELIMINATING THE NEED FOR A HYDRAULIC UNIT.
- **DOUBLE LEAD WORM GEAR**
  OPTIMUM DURABILITY AND HIGHEST ACCURACY
- **EXTRA LARGE CROSS ROLLER BEARING**
  PROVIDES THE HIGHEST RIGIDITY AND ACCURACY
- **COMPACT & VERSATILE DESIGN**
  HORIZONTAL AND VERTICAL USE

KITAGAWA
MR SERIES NC ROTARY TABLES

LOAD CAPACITIES

	PERMISSIBLE LOAD		MAX. MACHINE FORCE			*MAX. TORQUE CAPACITY
	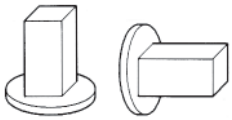		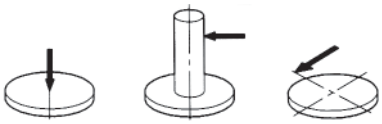			
MODEL	lb.	lb.	lb.	ft-lb.	ft-lb.	ft-lb. W
MR120R	264	132	1798	258	110	133
MR160R	353	176	2248	443	229	162
MR200R	441	220	3822	811	258	199
MR250R	551	276	4721	1180	443	354
MR320R	772	397	5620	1772	885	590

Note: Clamping force is based on pneumatic at 71 PSI.
Note: * means maximum torque capacity of worm gear per 1 rpm table rotation.

GUARANTEED ACCURACIES

ITEM	DESCRIPTION OF INSPECTION	GUARANTEED ACCURACY
1	Run-out of Table I.D.	.0004
2	Run-out of Table Face	.0008
3	Parallelism Between Table Face and Base	.0008
4	Parallelism Between Spindle and Base	.0008
5	Parallelism Between Spindle and Guide Block	.0008
6	Indexing Accuracy (second)	20
7	Repeatabillity (second)	±2

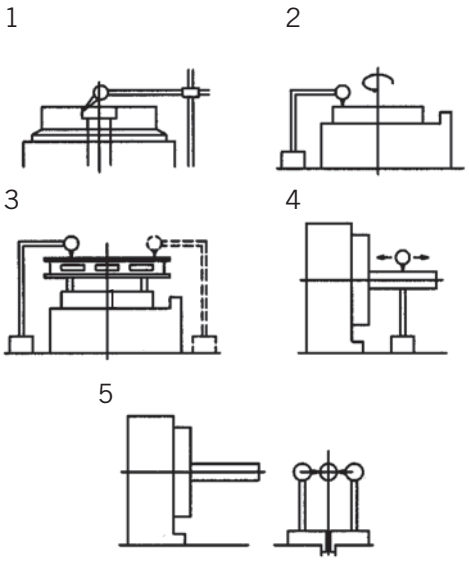

Note: Measurement is taken at 6" length from face or center of the table.

KITAGAWA
MR SERIES NC ROTARY TABLES

Patented

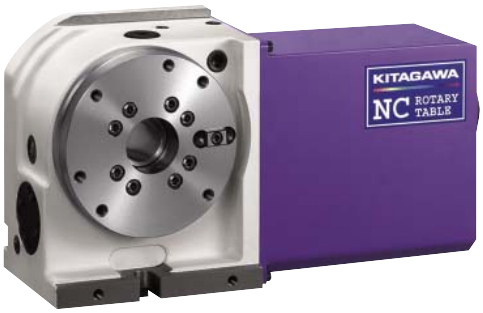

MODEL		MR120R	MR160R	MR200R	MR250R	MR320R
Table Diameter		5.04	6.50	7.95	9.84	12.6
Center Height in Vertical		4.72	5.51	5.51	7.09	8.86
Table Height in Horizontal		5.52	5.91	7.01	7.29	8.47
Overall Height in Vertical		8.86	9.37	10.59	12.01	15.16
Thru Hole Diameter		1.26	1.57	1.77	2.76	4.13
AC Servo Motor	Fanuc	α2/5000i	α2/5000i	α4/4000i	α4/4000i	α8/3000i
	Meldas	HA-FF63 HA33NT HF-H75S	HA-FF63 HA33NT HF-H75S	HA40N HC-53T HF-H54T	HA40N HC-103T HF-H104T	HA80N HC-103T HF-H104T
	Yasnac	SGM-08 SGMAH-08	SGM-08 SGMAH-08	SGMG-05 SGMAH-09 SGMGH-09	SGMG-05 SGMAH-09 SGMGH-09	SGMG-09 SGMGH-09 SGMAH-13
	OSP	BL-MC24J	BL-MC24J	BL-MC25J	BL-MC25J	BL-MC50J
Gear Ratio		1/60	1/72	1/90	1/90	1/120
**Maximum R.P.M.		50.0	41.6	33.3	33.3	25.0
Minimum Resolution (Degree)		0.001	0.001	0.001	0.001	0.001
Indexing Accuracy (sec)		20	20	20	20	20
Repeatability (sec)		±2	±2	±2	±2	±2
*Clamping Force (ft-lb.)		110	229	258	443	885
Permissible Load (lb.)	Horizontal	264	353	441	551	772
	Vertical	132	176	220	276	397
Maximum Work Inertia (lb.-in-sec^2)		1.91	4.51	8.85	17.26	39.67
Weight (lb.)		62	88	108	187	287

Note: * Clamping force is based on air pressure at 71 PSI.
Note: ** means that maximum RPM is obtained with motor speed at 3,000 rpm.
Note: See accessory chart (p236) for complete listing of optional accessories.
Note: Recommended oil is Mobil Vactra #1 for MR120R & 160R and Vactra #2 for MR200R, 250R, & 320R.

KITAGAWA
MR SERIES NC ROTARY TABLES

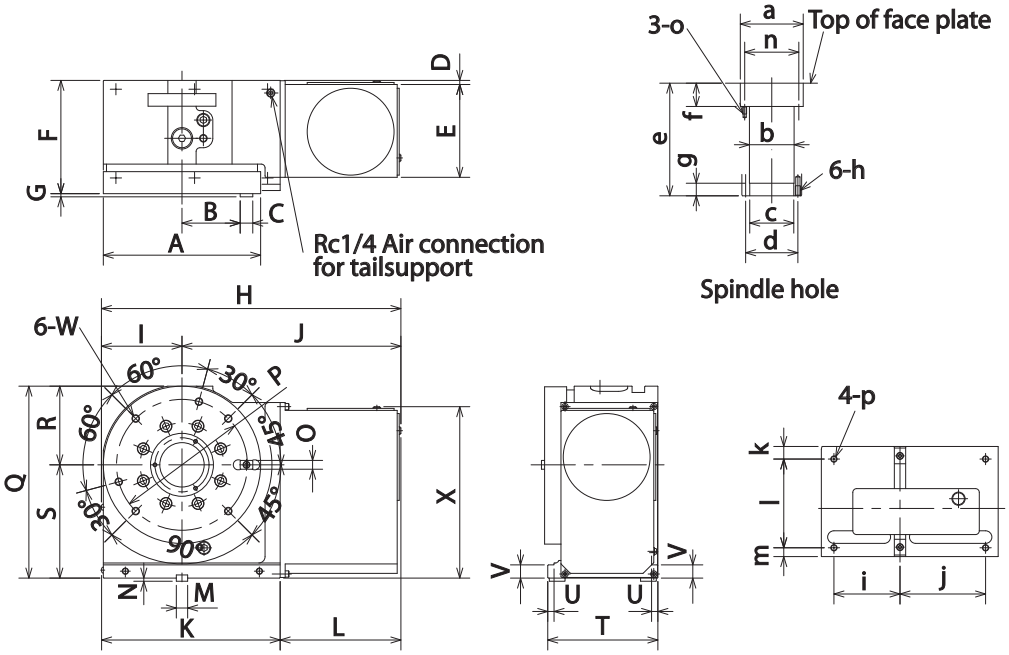

MODEL	A	B	C	D	E	F	G	H	I	J	K	L	M
MR120R	5.04	1.65	.79	.40	4.76	5.36	.16	15.24	3.35	11.89	7.05	8.19	.5512 h7
MR160R	6.50	1.97	.79	.35	4.84	5.71	.20	16.81	3.62	13.19	7.91	8.90	.7087 h7
MR200R	7.95	2.64	.79	.27	5.79	6.81	.20	18.27	4.41	13.86	10.16	8.11	.7087 h7
MR250R	9.84	3.64	.79	.26	5.81	7.09	.20	18.74	5.04	13.70	11.18	7.56	.7087 h7
MR320R	12.60	4.92	.79	.59	6.02	8.27	.20	22.05	6.30	15.75	12.60	9.45	.7087 h7

N	O	P	Q	R	S	T	U	V	W	X	a	b
.20	.3937 h7	4.45	8.07	3.35	4.72	5.16	.39	.83	M8	8.86	1.9685 H7	1.28
.20	.5512 h7	5.71	9.37	3.86	5.51	5.59	.39	.83	M10	8.68	1.9685 H7	1.59
.20	.5512 h7	6.69	9.84	4.33	5.51	6.61	.39	.83	M10	10.59	2.5591 H7	1.81
.20	.5512 h7	8.19	12.01	4.92	7.09	6.89	.39	.83	M12	10.73	3.9370 H7	2.80
.20	.5512 h7	11.10	15.16	6.30	8.86	7.87	.39	1.18	M12	13.82	5.1181 H7	4.17

c	d	e	f	g	h	i	j	k	l	m	n	o	p
1.2600 H8	1.61	5.33	.94	.79	M5	2.36	2.36	.83	3.78	.55	1.61	M5	M10
1.5748 H8	1.97	5.67	1.10	.79	M6	2.76	3.70	.98	4.06	.55	—	—	M10
1.7717 H8	2.17	6.77	1.38	.79	M6	3.35	5.00	.83	5.24	.55	2.09	M5	M10
2.7559 H8	3.27	7.05	1.46	.79	M8	4.13	5.35	.79	5.55	.55	3.39	M6	M10
4.1339 H8	4.80	8.24	1.34	.79	M10	4.72	4.72	.63	6.65	.59	4.57	M6	M16

KITAGAWA
T SERIES NC ROTARY TABLES

Patented

TILTING, SIDE AND REAR MOTOR-MOUNT ROTARY TABLES... the industry leaders for durability and precision.

Featuring robust construction and powerful clamping for ultimate accuracy. Kitagawa's outstanding line-up is designed to handle the widest possible range of applications, including shaft work requiring a large thru hole. Inductosyn or Rotary Scale option available upon request.

NOW...built-in air boosters are standard for all TX models. And all models are available in true 4th and 5th axes interface or indexers with MAC mini i controller.

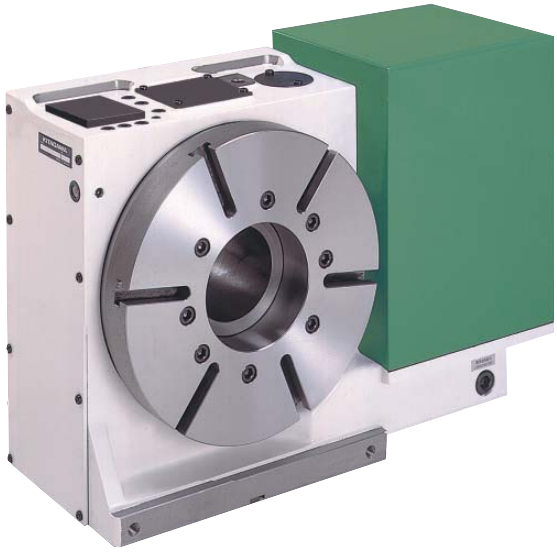

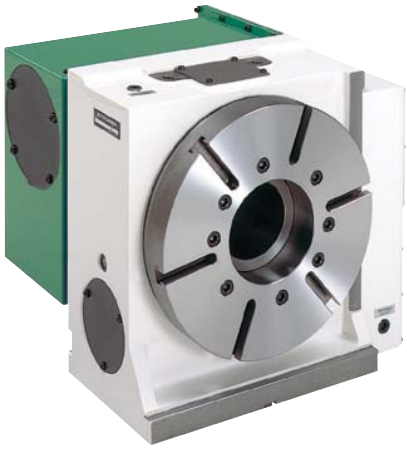

KITAGAWA
T SERIES NC ROTARY TABLES

LOAD CAPACITIES

	PERMISSIBLE LOAD		MAX. MACHINE FORCE			*MAX. TORQUE CAP.
	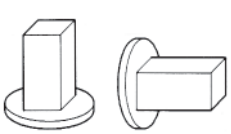		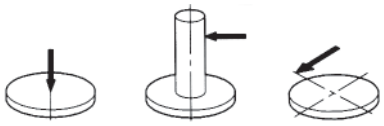			
MODEL	lb.	lb.	lb.	ft-lb.	ft-lb.	ft-lb. W
TMX160, TBX160	353	176	2248	443	332	177
TMX200,TBX200	441	221	3822	811	443	229
TMX250,TBX250	551	276	4721	1180	812	538
TRX320,TBX320	772	397	5845	1844	1918	738
TR401	1102	551	7194	3688	1844	1254
TR500	1323	661	11240	5901	2360	1918
TR630	2205	882	15736	7376	2950	3688

Note: Clamping force is based on air pressure at 71 PSI and hydraulic oil pressure at 500 PSI.
Note: * means maximum torque capacity of worm gear per 1 rpm table rotation.

GUARANTEED ACCURACIES

ITEM	DESCRIPTION OF INSPECTION	GUARANTEED ACCURACY
1	Flatness of Table Face	.0004
2	Parallelism Between Table Face and Base	.0008
3	Parallelism Between Center of Table and Base	.0008
4	Run-out of Table Face in Rotation	.0004
5	Concentricity of Center Hole	.0004
6	Parallelism Between Center of Table and Center of Guide Blocks	.0008
7	Deviation Between Center of Table and Center of Guide Blocks	.0008
8	Indexing Accuracy	*15
9	Repeatabillity	±2

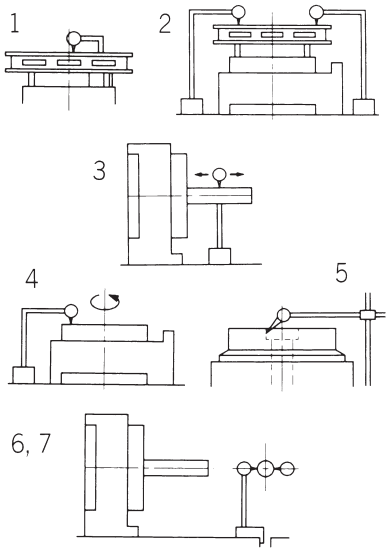

Note: * means 20 seconds for model: TMX160, TBX160, TMX200, TBX200.
Note: Measurement is taken at 12” length from either face or center of the table.

KITAGAWA
T SERIES NC ROTARY TABLES

MODELS
TMX160
TMX200
TMX250
TRX320

MODEL		TMX160	TMX200	TMX250	TRX320
Table Diameter		6.50	7.87	9.84	12.60
Center Height in Vertical		4.72	5.51	7.09	8.86
Table Height in Horizontal		5.71	6.93	8.27	8.86
Overall Height in Vertical		9.69	11.02	13.07	15.94
Thru Hole Diameter		1.57	2.05	3.07	4.33
Width of T Slot		.47	.47	.47	.55
AC Servo Motor	Fanuc	α2/5000i	α4/4000i	α4/4000i	α8/3000i
	Meldas	HA-FF63 HA33NCTS	HC-53T HA40N	HC-103T HA80N	HA80N HC103T HF-H104T
	Yasnac	SGM-08 SGMAH-05 SGMAH-08	SGMG-05 SGMAH-09	SGMG-09 SGMAH-09	SGMG-09 SGMGH-09 SGMAH-09
	OSP	BL-MC24J	BL-MC25J	BL-MC50J	BL-MC50J
Gear Ratio		1/72	1/90	1/90	1/120
**Maximum R.P.M.		41.6	33.3	33.3	25.0
Minimum Resolution (Degree)		0.001	0.001	0.001	0.001
Indexing Accuracy (sec)		20	20	15	15
Repeatability (sec)		±2	±2	±2	±2
*Clamping Force (ft-lb.)		332	443	811	1918
Permissible Load (lb.)	Horizontal	353	441	551	772
	Vertical	176	221	276	397
Maximum Work Inertia (lb.-in-sec^2)		4.5	8.9	17.3	40
Weight (lb.)		124	133	223	432

Note: * means clamping force is based on air pressure at 71 PSI.
Note: ** means that maximum RPM is obtained with motor speed at 3,000 rpm.
Note: See accessory chart (p236) for complete listing of optional accessories.

KITAGAWA
T SERIES NC ROTARY TABLES

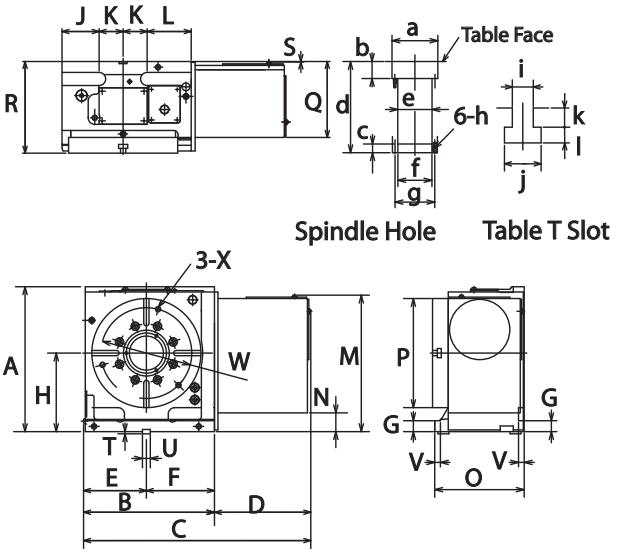

FIG. 1

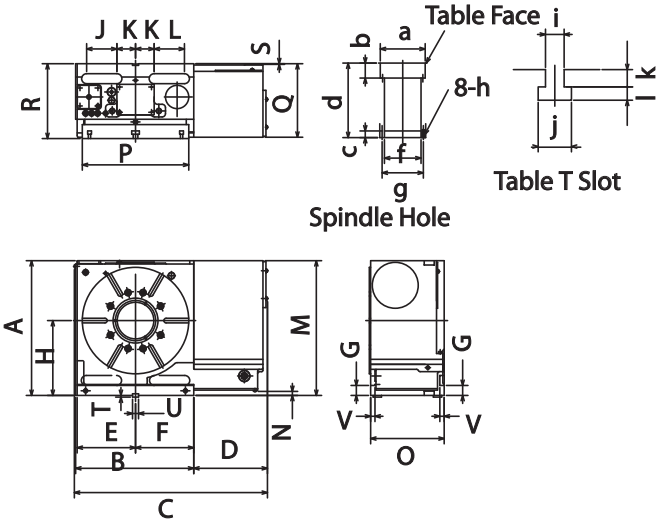

FIG. 2

MODEL	A	B	C	D	E	F	G	H	J	K	L	M
TMX160	9.13	8.11	16.97	8.86	4.09	4.02	.79	4.72	—	—	—	9.69
TMX200	10.24	9.61	19.17	9.57	4.69	4.92	.79	5.51	2.68	1.85	2.48	12.44
TMX250	13.07	11.81	21.54	9.72	5.67	6.14	.98	7.09	3.35	2.17	3.98	13.07
TRX320	15.94	13.98	24.88	10.75	6.91	6.89	1.18	8.86	3.58	2.21	3.58	16.26

N	O	P	Q	R	S	T	U	V	W	X	a	b
.24	5.51	6.50	5.51	5.71	.03	.20	.7087 h7	.39	5.71	M10	1.9685 H7	1.26
.51	6.73	7.87	6.73	6.93	.08			.39	6.69	M10	2.9528 H7	1.46
1.69	8.07	9.84	7.52	8.27	.04			.51	8.19	M12	4.1339 H7	1.54
.48	8.70	12.60	8.70	8.86	.08			.51	—	—	5.3150 H7	1.77

c	d	e	f	g	h	i	j	k	l	FIG.
.79	5.67	1.59	1.5748 H8	1.97	M6	.47	.83	.43	.35	1
	6.89	2.07	2.0472 H8	2.44	M6					1
	8.23	3.09	3.0708 H8	3.58	M8					1
	8.82	4.35	4.3310 H8	4.88	M8	.55	.98	.51	.39	2

KITAGAWA
T SERIES NC ROTARY TABLES

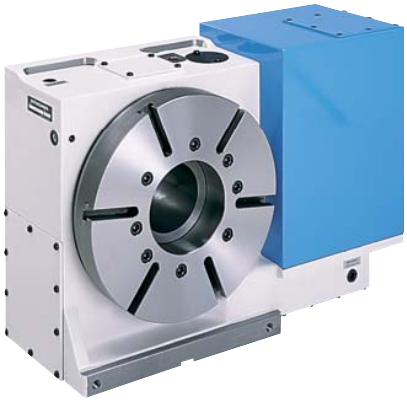

MODELS
TR401
TR500
TR630

MODEL		TR401	TR500	TR630
Table Diameter		15.75	19.69	24.80
Center Height in Vertical		10.04	12.20	15.75
Table Height in Horizontal		9.84	9.84	12.99
Overall Height in Vertical		18.70	23.54	29.92
Thru Hole Diameter		6.06	6.69	9.84
Width of T Slot		.71	.71	.71
AC Servo Motor	Fanuc	α12/3000i	α12/3000i	α22/3000i
	Meldas	HA-100N HC202S	HA100N HC202S	HC-352S HA200N
	Yasnac	SGMG-20 SGMAH-20	SGMG-20 SGMAH-20	SGMG-30 SGMAH-30
	OSP	BL-MC100J	BL-MC100J	BL-MC200J
Gear Ratio		1/180	1/180	1/180
**Maximum R.P.M.		11.10	11.10	11.10
Minimum Resolution (Degree)		0.001	0.001	0.001
Indexing Accuracy (sec)		15	15	15
Repeatability (sec)		±2	±2	±2
*Clamping Force (ft-lb.)		1844	2360	3319
Permissible Load (lb.)	Horizontal	1102	1323	2205
	Vertical	551	661	882
Maximum Work Inertia (lb.-in-sec^2)		89	166	439
Weight (lb.)		770	1213	1984

Note: * means clamping force is based on hydraulic pressure at 500 PSI.
Note: ** means that maximum RPM is obtained with motor speed at 2,000 rpm.
Note: See accessory chart (p236) for complete listing of optional accessories.
Note: Order AB50T (p233) optional airbooster for use on machine with no hydraulic unit.

KITAGAWA
T SERIES NC ROTARY TABLES

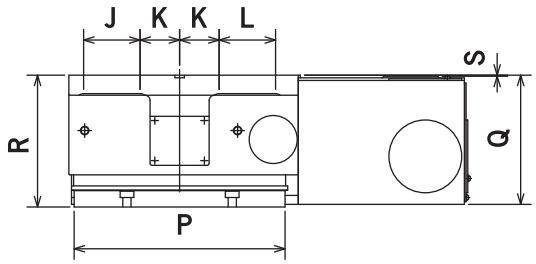

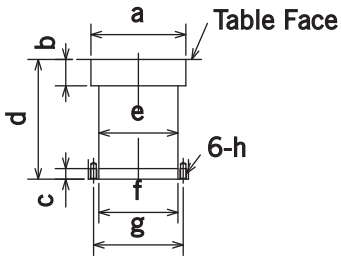

Spindle Hole

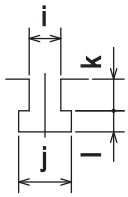

Table T Slot

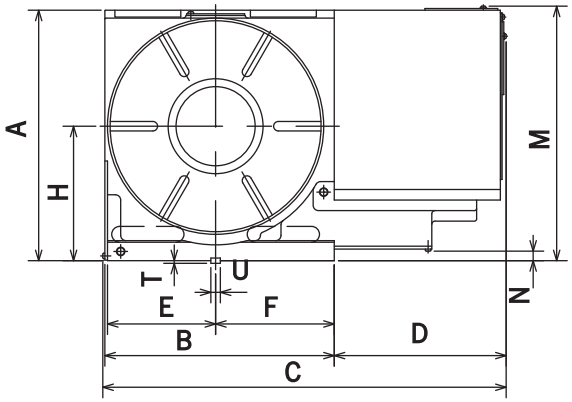

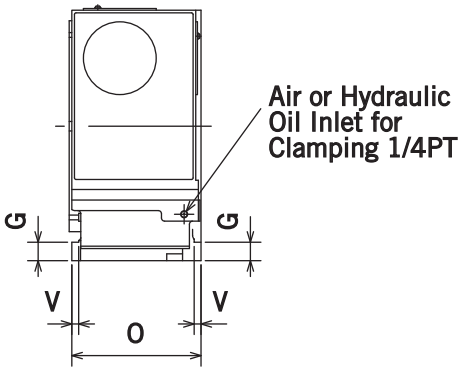

MODEL	A	B	C	D	E	F	G	H	J	K	L
TR401	18.70	17.13	30.07	12.80	8.07	8.86	1.38	10.04	4.21	2.95	4.21
TR500	23.23	21.97	34.37	12.24	10.24	11.54	1.38	12.20	4.92	3.94	4.92
TR630	29.92	29.61	38.39	8.31	13.58	13.39	1.57	15.75	7.68	3.54	7.68

M	N	O	P	Q	R	S	T	U	V	a
15.85	.71	9.65	15.75	9.57	9.84	.08	.20	.7087 h7	.51	7.0866 H7
23.54	3.31	9.65	19.69	9.65	9.84	.08	.20	.7087 h7	.51	7.8740 H7
25.51	3.03	12.80	24.80	12.80	12.99	.08	.20	.7087 h7	.51	11.0236 H7

b	c	d	e	f	g	h	i	j	k	l
1.97	.79	8.94	6.06	6.0630 H8	6.69	M12	.71	1.18	.71	.47
1.97	.79	9.13	6.69	6.6929 H8	7.48	M12	.71	1.18	.71	.47
2.95	.79	10.98	9.84	9.8425 H8	10.87	M12	.71	1.18	.71	.47

KITAGAWA
T SERIES NC ROTARY TABLES

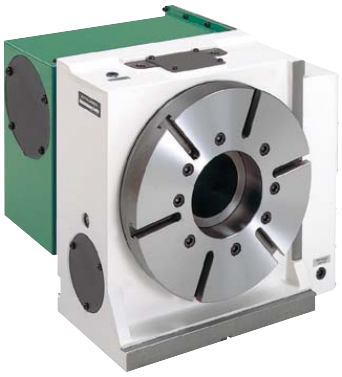

MODELS
TBX160
TBX200
TBX250
TBX320

MODEL		TBX160	TBX200	TBX250	TBX320
Table Diameter		6.50	7.87	9.84	12.60
Center Height in Vertical		4.72	5.51	7.09	8.86
Overall Height in Vertical		10.63	11.65	14.45	16.06
Thru Hole Diameter		1.57	2.05	3.07	4.33
Width of T Slot		.47	.47	.47	.55
AC Servo Motor	Fanuc	α2/5000i	α4/4000i	α4/4000i	α8/3000i
	Meldas	HA-FF63 HA33NCTS	HC-53T HA40N	HC-103T HA80N	HA80N HC-103T HF-H104T
	Yasnac	SGM-08 SGMAH-05 SGMAH-08	SGMG-05 SGMGH-09	SGMG-09 SGMGH-09	SGMG-09 SGMGH-09 SGMAH-13
	OSP	BL-MC24J	BL-MC25J	BL-MC50J	BL-MC50J
Gear Ratio		1/72	1/90	1/90	1/120
*Maximum R.P.M.		41.6	33.3	33.3	25.0
Minimum Resolution (Degree)		0.001	0.001	0.001	0.001
Indexing Accuracy (sec)		20	20	15	15
Repeatability (sec)		±2	±2	±2	±2
Clamping Force (ft-lb.)	Air Pressure at 71PSI	332	443	811	1918
Permissible Load (lb.)	Vertical	176	221	276	397
Maximum Work Inertia (lb.-in-sec^2)		2.3	4.4	8.7	19.8
Weight (lb.)		146	164	298	485

Note: * means that maximum RPM is obtained with motor speed at 3,000 rpm.
Note: See accessory chart (p236) for complete listing of optional accessories.

KITAGAWA
T SERIES NC ROTARY TABLES

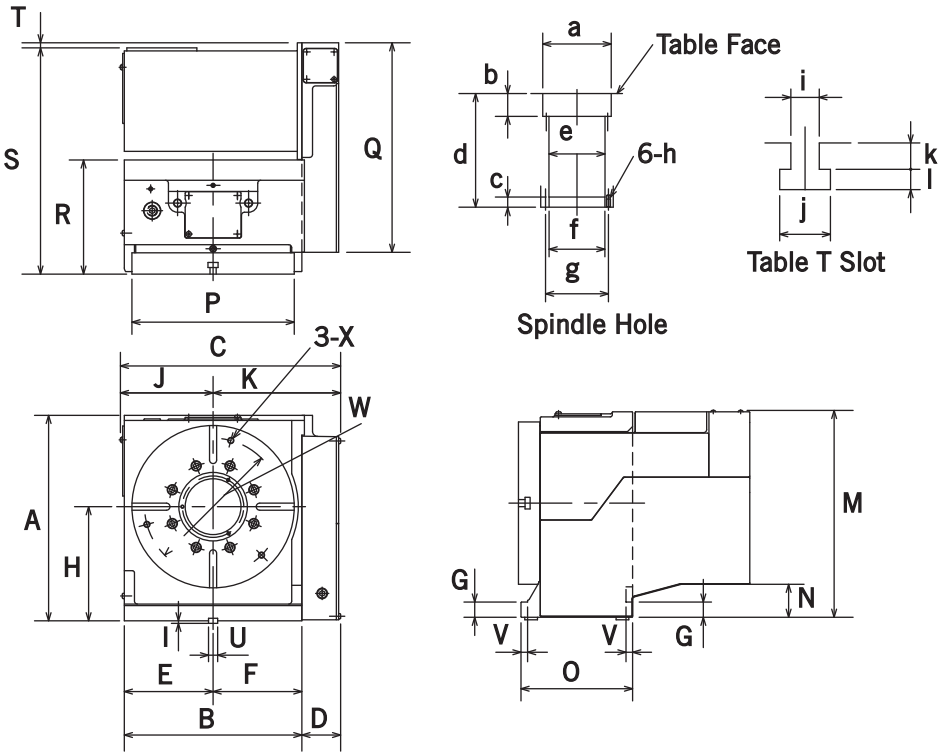

MODEL	A	B	C	D	E	F	G	H	I	J	K	M
TBX160	10.63	8.11	11.22	2.80	4.10	4.02	.79	4.72	.20	4.41	6.81	10.63
TBX200	10.24	9.33	13.31	2.80	4.53	4.80	.79	5.51	.20	5.71	7.60	11.85
TBX250	13.07	11.65	15.94	2.99	5.51	6.14	.98	7.09	.20	6.81	9.13	14.76
TBX320	15.94	13.78	17.09	2.99	6.89	6.89	1.18	8.86	.20	7.20	9.88	16.06

N	O	P	Q	R	S	T	U	V	W	X	a
1.34	5.51	6.50	11.73	5.71	11.34	.59	.7087 h7	.39	5.71	M10	1.9685 H7
1.38	6.73	7.87	12.36	6.93	14.09	—	.7087 h7	.39	6.69	M10	2.9528 H7
2.17	8.07	9.84	14.84	8.27	15.94	.31	.7087 h7	.51	8.19	M12	4.1339 H7
2.56	8.66	12.60	16.26	8.86	17.64	.31	.7087 h7	.51	—	—	5.3150 H7

b	c	d	e	f	g	h	i	j	k	l
1.26	.79	5.67	1.57	1.5748 H8	1.97	M6	.47	.83	.43	.35
1.46	.79	6.89	2.09	2.0472 H8	2.44	M6	.47	.83	.43	.35
1.54	.79	8.23	3.09	3.0709 H8	3.58	M8	.47	.83	.43	.35
1.77	.79	8.82	4.35	4.3307 H8	4.88	8-M8	.55	.98	.51	.39

KITAGAWA
MULTI-SPINDLE NC ROTARY TABLES

MODEL NO.	KIW NO.
TM-100-2R	TM2100
TM-100-3R	TM3100
TM-160-2R	TM2160
TM-160-3R	TM3160

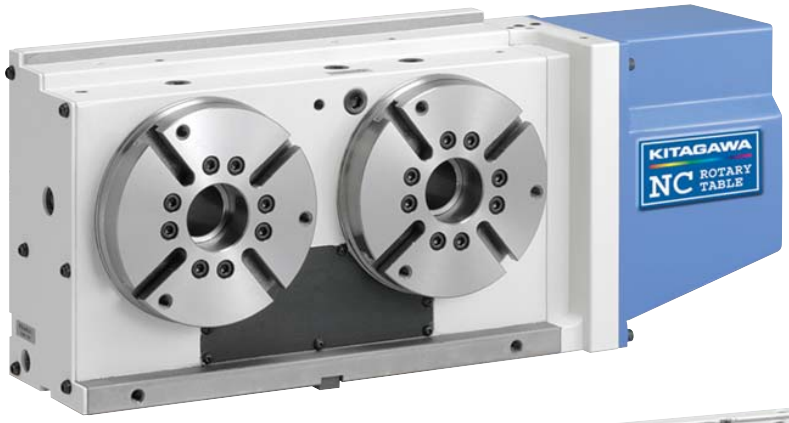

- **SOLID-BODY DESIGN FOR MAXIMUM RIGIDITY AND COMPACTNESS**
- **HIGH SPEED TABLE ROTATION**
  83.3 RPM FOR TM100-2R
  69.4 RPM FOR TM100-3R
  33.3 RPM FOR TM160-2R AND TM160-3R
- **PRECISE INDEXING ACCURACY**
  60" WITH +/-2.5" REPEATABILITY FOR 100 MODELS
  30" WITH +/-2" REPEATABILITY FOR 160 MODELS
- **POWERFUL DOUBLE DISC CLAMPING**
  BOTH AIR AND HYDRAULIC TYPES ARE AVAILABLE IN 160 MODELS
- **EXTRA LARGE CROSS ROLLER BEARING**
- **AIR-PURGE**
  MOTOR COVER IS AIR-PURGED TO PREVENT MOISTURE AND FOREIGN MATERIALS FROM ENTERING

KITAGAWA
MULTI-SPINDLE NC ROTARY TABLES

LOAD CAPACITIES

		PERMISSIBLE LOAD		MAX. MACHINE FORCE			*MAX. TORQUE CAP.
		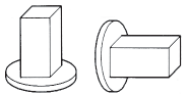		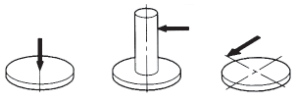			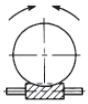
MODEL	KIW NO.	lb.	lb.	lb.	ft-lb.	ft-lb.	ft-lb. W
TM-100-2R, TM-100-3R	TM2100,TM3100	132	66	1349	148	(89)	133
TM-160-2R, TM-160-3R	TM2160,TM3160	353	176	2248	443	295(130)	221

Note: Clamping force is based on air pressure at 71 PSI and hydraulic oil pressure at 500 PSI. Number in ( ) means air clamping force.

GUARANTEED ACCURACIES

ITEM	DESCRIPTION OF INSPECTION	GUARANTEED ACCURACY
1	Run-out of Table I.D.	.0004
2	Run-out of Table Face	.0008
3	Parallelism Between Spindle and Base	.0008
4	Parallelism Between Spindle and Guide Block	.0008
5	Variation in Center Heights	.0008
6	Variation Between Guide Block and Each Table Face	.0012
7	Flatness of Table Face	.0004
8	Parallelism Between Table Face and Base	.0004
9	Variation in Height Between Each Table Face and Base	.0008
10	Variation Between Guide Block and Each Spindle	.0008
11	Indexing Accuracy (second)	*30
12	Repeatabillity (second)	**±2

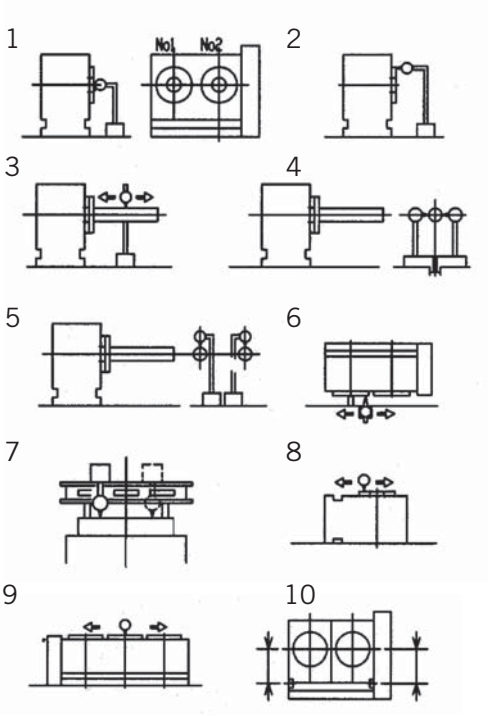

Note: * means 60 seconds for models TM2100 and TM3100
Note: ** means ±2.5 seconds for models TM2100 and TM3100

KITAGAWA
MULTI-SPINDLE NC ROTARY TABLES

MODEL		TM-100-2R (TM2100)	TM-100-3R (TM3100)	TM-160-2R (TM2160)	TM-160-3R (TM3160)
Table Diameter		4.13	4.13	6.50	6.50
Center Height in Vertical		4.33	4.33	5.51	5.51
Overall Height in Vertical		8.27	8.27	9.92	9.92
Thru Hole Diameter		1.26	1.26	1.57	1.57
AC Servo Motor	Fanuc	α4/4000i			
	Meldas	HC-53T HA40N			
	Yasnac	SGMG-05 SGMAH-09			
	OSP	BL-MC25J			
Gear Ratio		1/36	1/36	1/90	1/90
*Maximum R.P.M.		83.3	69.4	33.3	33.3
Minimum Resolution (Degree)		0.001	0.001	0.001	0.001
Indexing Accuracy (second)		60	60	30	30
Repeatabillity (second)		±2.5	±2.5	±2	±2
Maximum Workpiece Diameter		4.13	4.13	6.5	6.5
Clamping Force (ft-lb.)	Air Pressure at 71PSI	86	86	130	130
	Hydraulic Pressure at 500PSI	—	—	295	295
Permissible Load (lb.)	Horizontal	132	132	353	353
	Vertical	66	66	176	176
Maximum Work Inertia (lb.-in-sec^2)		0.48	0.48	4.51	4.51
Weight (lb.)		187	220	220	331

Note: * means that max RPM is obtained at motor speed of 3,000 rpm for TM2100, TM2160 & TM3160, and at motor speed of 2,500 rpm for TM3100.
Note: See accessory chart (p236) for complete listing of optional accessories.
Note: Specify pneumatic/hydraulic clamping for TM-160-2R & -3R when ordering.
Note: Order AB25T (p233) optional airbooster for hydraulic clamping units on machines with no hydraulic unit.

KITAGAWA
MULTI-SPINDLE NC ROTARY TABLES

TM-100-2R

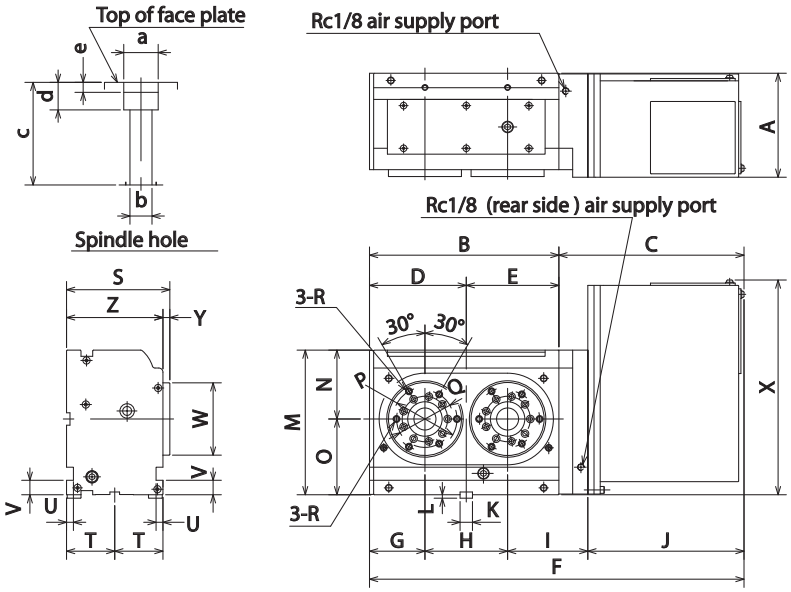

TM-100-2R

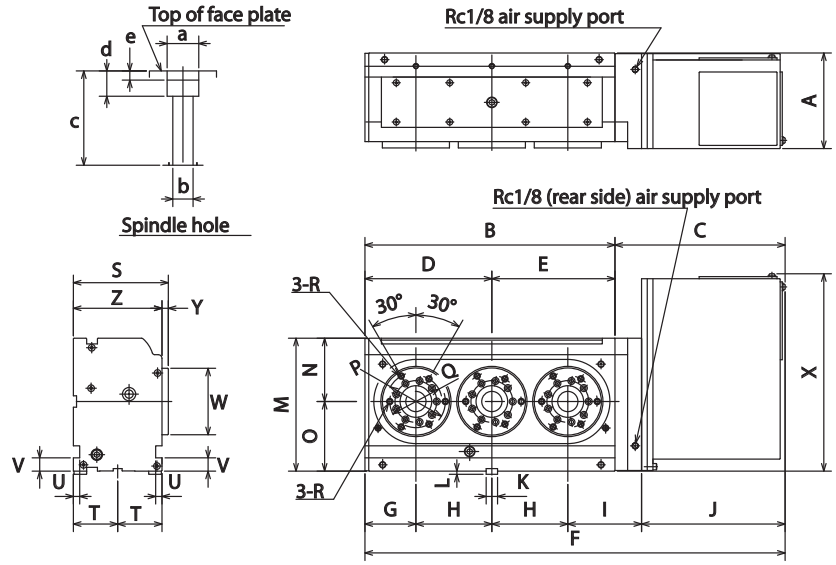

MODEL	KIW NO.	A	B	C	D	E	F	G	H	I
TM-100-2R	TM2100	5.94	10.83	10.59	5.55	5.28	21.42	3.19	4.7244±.00079	4.57
TM-100-3R	TM3100	5.94	15.55	10.59	7.91	7.64	26.14	3.19	4.7244±.00079	4.57

J	K	L	M	N	O	P	Q	R	S	T	U
8.94	.7087 h7	.20	8.27	3.94	4.33	3.66	3.25	M8	5.91	2.76	.39
8.94	.7087 h7	.20	8.27	3.94	4.33	3.66	3.25	M8	5.91	2.76	.39

V	W	X	Y	Z	a	b	c	d	e
.83	4.13	12.28	.39	5.51	1.9685 H7	1.26	5.87	1.57	.57
.83	4.13	12.28	.39	5.51	1.9685 H7	1.26	5.87	1.57	.57

KITAGAWA
MULTI-SPINDLE NC ROTARY TABLES

TM-160-2R

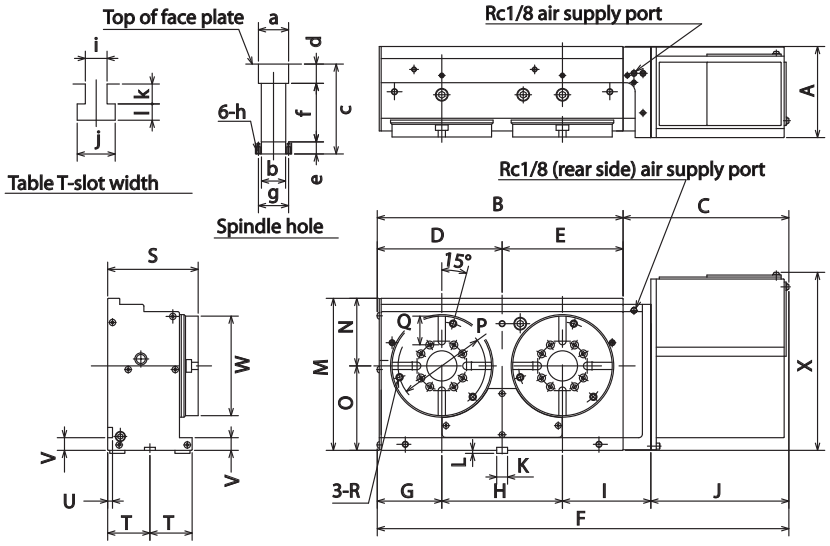

TM-160-3R

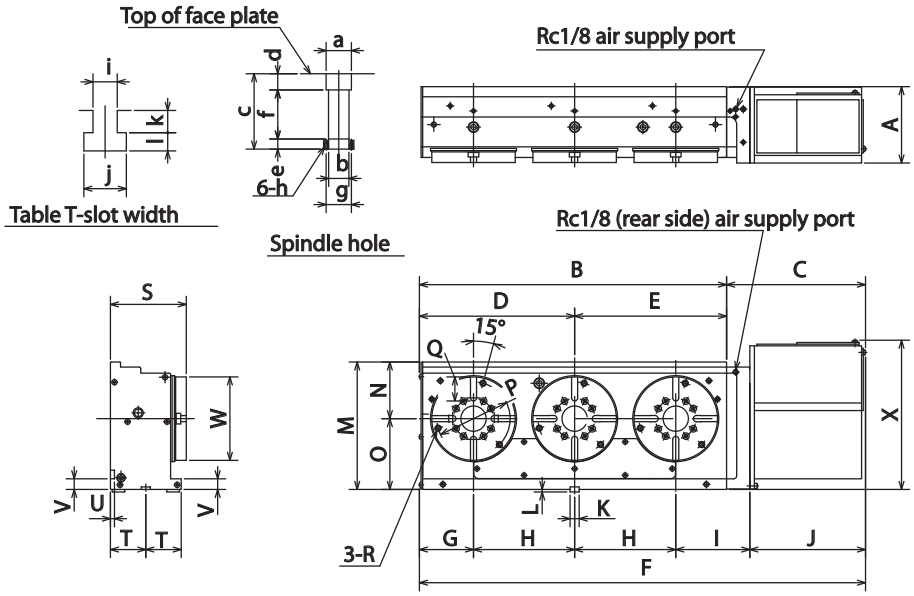

CODE NO.	MODEL	A	B	C	D	E	F	G	H	I	J
TM-160-2R	TM2160	5.94	16.06	10.83	8.15	7.91	26.89	4.21	7.87402±.00079	5.79	9.02
TM-160-3R	TM3160	5.94	23.94	10.83	12.09	11.85	34.76	4.21	7.87402±.00079	5.79	9.02

K	L	M	N	O	P	Q	R	S	T	U	V	W	X
.7087 h7	.20	9.92	4.41	5.51	5.71	1.87	M10	5.91	2.76	.31	.83	6.50	11.61
.7087 h7	.20	9.92	4.41	5.51	5.71	1.87	M10	5.91	2.76	.31	.83	6.50	11.61

a	b	c	d	e	f	g	h	i	j	k	l
1.9685 H7	1.5748 H8	5.87	1.26	.79	3.82	1.97	M6	.47	.83	.43	.35
1.9685 H7	1.5748 H8	5.87	1.26	.79	3.82	1.97	M6	.47	.83	.43	.35

KITAGAWA
NC TILTING ROTARY TABLES

Photo of TT101

MODELS

TT101
TT140
TT(TW)182
TT(TTS)251
TT(TTS)321
TW2180

Photo of TW2180

- **OPTIMUM EFFICIENCY**
  DUAL AXIS DESIGN PROVIDE ANY COMPOUND ANGLE AND ELIMINATING ADDITIONAL SET UP
- **STATIONARY TILTING AND ROTARY MOTOR CASES**
  COMPACT DESIGN MINIMIZES INTER-FERENCE PROBLEM
- **AIR PURGE**
  MOTOR COVER IS AIR-PURGED TO PREVENT MOISTURE AND FOREIGN MATERIALS FROM ENTERING
- **POWERFUL DOUBLE DISC CLAMPING**
  DOUBLE CLAMPING FORCE AROUND FULL 360˚
- **EXTRA LARGE CROSS ROLLER BEARING**
  PROVIDES THE HIGHEST RIGIDITY AND ACCURACY
- **BUILT-IN AIR BOOSTERS**
  STANDARD FOR MODEL TT182
- **BUILT-IN ROTARY JOINT (OPTION)**
  FOR SIMPLE AND CLEAN AIR/HYDRAULIC PIPING ARRANGEMENT ON MODELS TT140 AND TT182

KITAGAWA
NC TILTING ROTARY TABLES

LOAD CAPACITIES

	PERMISSIBLE LOAD			MAX. MACHINE FORCE			MAX. TORQUE CAPACITY
	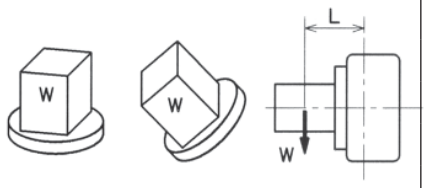			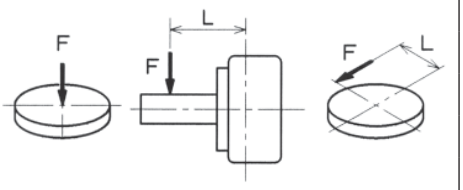			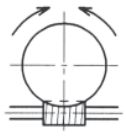
MODEL	lb.	lb.	ft-lb.	lb.	ft-lb.	ft-lb.	ft-lb.w
TT101	77	44	51	899	(221)	(133)	118
TT140	110	66	79	882	(369)	(206)	140
TT(TW)182	132	88	86	1103	590	332	184
TT(TTS)251	220	132	188	2646	885	664	442
TT(TTS)321	330	220	543	3528	1917	1917	737

Note: Clamping force is based on air pressure at 71 PSI and hydraulic oil pressure at 500 PSI.
Note: TT101 and TT140 are air clamping only. Number in ( ) means air clamping force.
Note: * means maximum torque capacity of worm gear per 1rpm table rotation.

GUARANTEED ACCURACIES

ITEM	DESCRIPTION OF INSPECTION		GUARANTEED ACCURACY
1	Flatness of Table Face		*.0004
2	Parallelism Between Table Face and Base		*.0008
3	Run-out of Table Face in Rotation		.0006
4	Concentricity of Center Hole		*.0008
5	Parallelism Between Center of Tilting Axis and Base		.0004
5	Parallelism Between Table Face and Guide Blocks		*.0008
6	Indexing Accuracy (second) Rotary Axis	TT101, TT140	30
		TT(TW)182 TT(TTS)251, 321	**20
7	Indexing Accuracy (second) Tilting Axis	TT101, TT140, TT(TW)182	60
		TT(TTS)251, 321	45

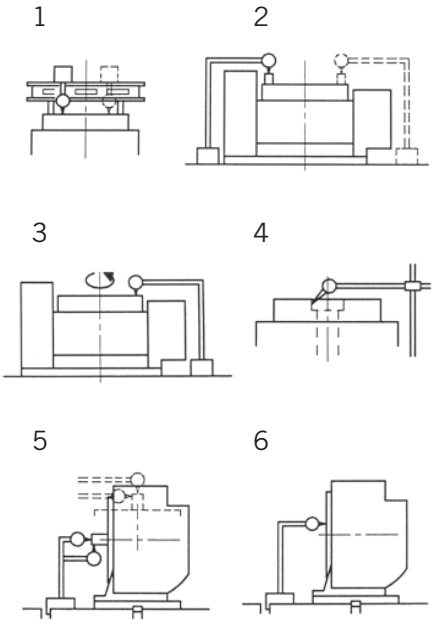

Note: * means measurement is taken on overall length.

KITAGAWA NC TILTING ROTARY TABLES

MODEL			TT101	TT251 TTS251	TT321 TTS321
Table Diameter			4.33	9.84	12.6
Table Height in Horizontal			7.28	11.81	13.78
Center Height at 90˚ tilted			5.51	8.86	10.04
Overall Height at 90˚ tilted			9.13	14.37	17.20
Thru Hole Diameter			1.26	2.76	4.33
Width of T Slot			—	0.47	0.55
AC Servo Motor	Fanuc	R. Axis	α2/5000i	α4/4000i	α8/3000i
		T. Axis			
	Meldas	R. Axis	HA-FF33 HA33NT	HC-103T HA80N	HA80N HC-103T HF-H104T
		T. Axis	HA-FF63 HA33NT		
	Yasnac	R. Axis	SGMP-04 SGMAH-04	SGMG-09 SGMGH-09	SGMG-09 SGMGH-09 SGMAH-13
		T. Axis	SGM-08 SGMAH-08		
	OSP	R. Axis	BL-MC24J	BL-MC50J	BL-MC50J
		T. Axis			
Gear Ratio		R. Axis	1/72	1/90	1/120
		T. Axis	1/120	1/180	1/360
**Maximum RPM		R. Axis	41.6	33.3	25
		T. Axis	25	16.6	8.33
Indexing Accuracy (sec)		R. Axis	30	20	20
		T. Axis	60	45	45
Repeatability (sec)		R. Axis	4	4	4
		T. Axis	4	4	4
Clamping Force (ft-lb.)		R. Axis	(133)	664	1917
		T. Axis	(221)	885	1917
Permissible Load (lb.)		Horiz.	77	220	331
		Tilted	44	132	220
Max Work Inertia (lb.-in-sec^2)			0.43	6.92	16.97
Weight (lb.)			143	595	794

Note: Clamping force is based on air pressure at 71 PSI and hydraulic oil pressure at 500 PSI
Note: Number in ( ) means air clamping force.
Note: ** means maximum RPM is obtained with motor speed at 3,000 rpm.
Note: Models TT(TTS) 251, & TT(TTS)321, furnished with two AB25T (p233) airboosters.
Note: Recommended oil is: Mobil Vactra No.1 for TT101 and Mobil Vactra No. 2 for TT(TTS)251 and TT(TTS)321.

KITAGAWA NC TILTING ROTARY TABLES

- **BUILT-IN AIR BOOSTERS STANDARD ON TT(TW)182**
- **BUILT-IN ROTARY JOINT (OPTIONAL) FOR SIMPLE AND CLEAN AIR/HYDRAULIC PIPING ARRANGEMENT ON TT140 AND TT(TW)182**

MODEL			TT140	TT(TW)182
Table Diameter			5.51	7.09
Table Height in Horizontal			7.87	9.84
Center Height at 90˚ tilted			7.87	7.09
Overall Height at 90˚ tilted			12.28	11.97
Thru Hole Diameter			1.26	1.58
Width of T Slot			—	.47
AC Servo Motor	Fanuc	Rotary Axis	α2/5000i	α2/5000i
		Tilting Axis		
	Meldas	Rotary Axis	HA-FF63	HA-FF63
		Tilting Axis	HF-H75T	HA33NC-TS
	Yasnac	Rotary Axis	SGMAH-08	SGMAS-08
		Tilting Axis		SGMAH-08
	OSP	Rotary Axis	BL-MC24J	BL-MC24J
		Tilting Axis		
Gear Ratio		Rotary Axis	1/72	1/90
		Tilting Axis	1/180	1/180
**Maximum R.P.M.		Rotary Axis	41.6	33.3
		Tilting Axis	16.6	16.6
Indexing Accuracy (sec)		Rotary Axis	30	20
		Tilting Axis	60	60
Repeatability (sec)		Rotary Axis	4	4
		Tilting Axis	4	4
*Clamping Force (ft-lb.)		Rotary Axis	(206)	332
		Tilting Axis	(369)	590
Permissible Load (lb.)		Tilted	110	132
		Horizontal	66	88
Maximum Work Inertia (lb.-in-sec^2)			1.06	2.16
Weight (lb.)			311	342

Note: * means clamping force is based on air pressure at 71 PSI.
Note: Number in ( ) means air clamping force.
Note: ** means maximum RPM is obtained with motor speed at 3,000 rpm.
Note: Recommended oil is Mobil Vactra No.1.

KITAGAWA
NC TILTING ROTARY TABLES

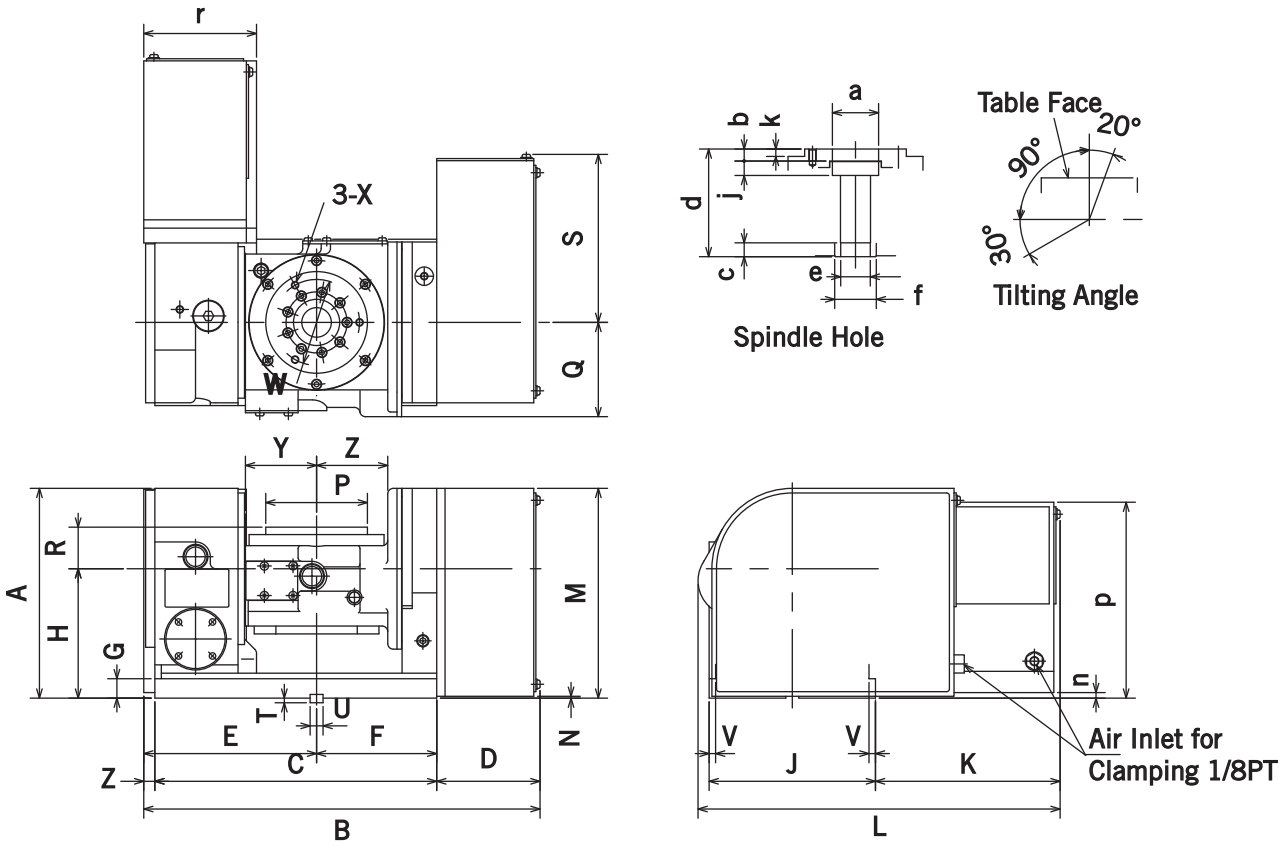

MODEL	A	B	C	D	E	F	G	H	J
TT101	8.94	16.89	12.01	4.41	7.36	5.12	.83	5.51	7.09

K	L	M	N	P	Q	R	S	T	U
8.27	15.43	8.94	.08	4.33	4.02	1.77	7.17	.20	.5512 h7

V	W	X	Y	Z	a	b	c
.28	3.66	M8	3.03	.47	1.9685 H6	.51	.59

d	e	f	j	k	n	p	r
4.59	1.2598 H8	1.77	.61	.32	.24	8.35	4.80

KITAGAWA
NC TILTING ROTARY TABLES

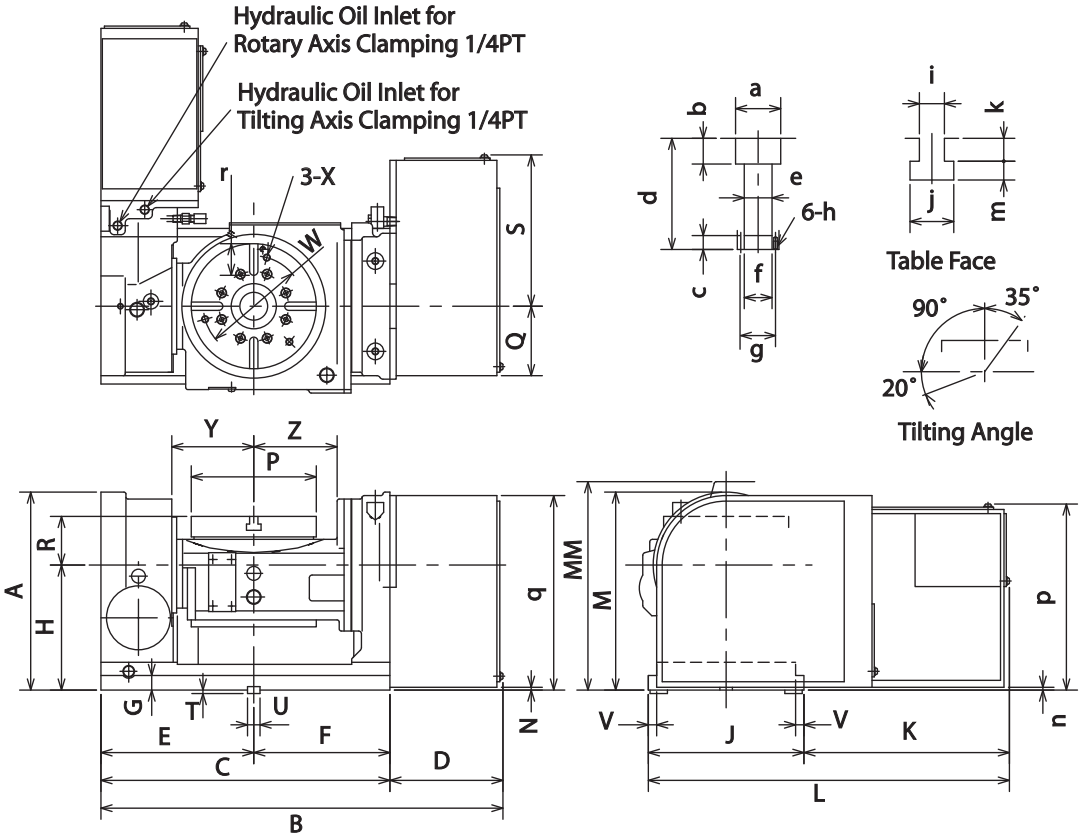

MODEL	A	B	C	D	E	F	G	H	J	K
TT251	13.78	26.77	20.55	6.22	11.42	9.13	.98	8.86	10.63	11.89
TT321	16.54	31.38	24.21	7.65	13.46	10.75	1.18	10.04	13.78	11.30

L	M	N	P	Q	R	S	T	U	V	W
23.39	14.37	.16	9.84	6.10	2.95	12.13	.20	.7087 h7	.39	8.19
25.08	16.54		12.60	6.89	3.74	12.13		.7087 h7	.39	—

X	Y	Z	MM	a	b	c	d	e	f
M12	5.71	5.51	14.37	3.9370 H7	1.34	.79	7.26	2.76	2.7559 H8
—	6.97	6.89	17.20	5.3150 H7	1.77		8.82	4.35	4.3307 H8

g	h	i	j	k	m	n	p	q	r
3.27	M8	.47	.83	.43	.35	.16	13.11	14.37	2.46
4.88	8-M8	.55	.98	.51	.39		16.54	16.54	2.95

Note: AB25T airboosters are not shown in the diagram.

KITAGAWA
NC TILTING ROTARY TABLES

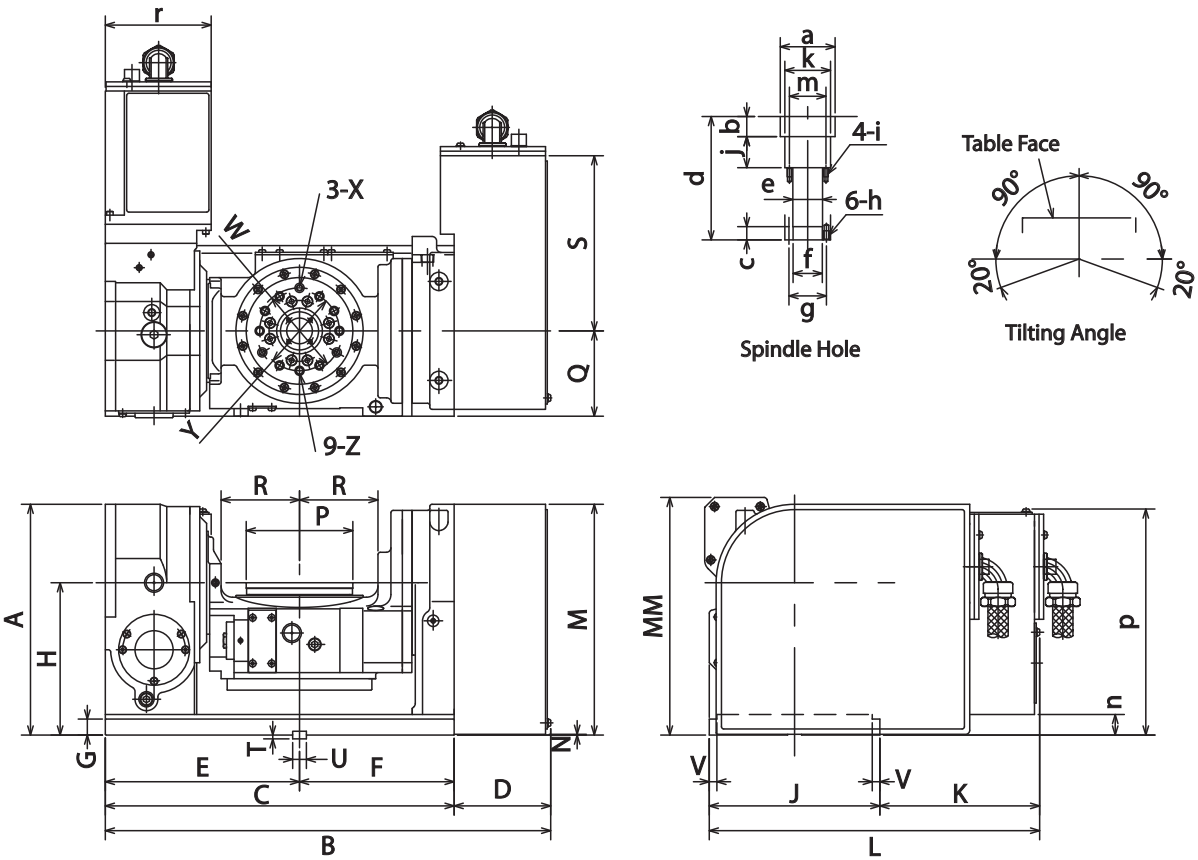

MODEL	A	B	C	D	E	F	G	H	J	K
TT140	11.93	23.03	18.03	5.00	10.04	7.99	.83	7.87	8.82	8.27

L	M	N	P	Q	R	S	T	U	V	W
17.09	11.93	.04	5.51	4.41	4.06	9.06	.20	.7087 h7	.39	4.45

X	Y	Z	MM	a	b	c	d	e
M8	4.12	M10	12.28	2.3622 H7	.87	.57	5.31	1.28

f	g	h	i	j	k	m	n	p	r
1.6535 H8	1.61	M6	M6	1.34	1.97	1.57	1.06	11.69	5.47

KITAGAWA
NC TILTING ROTARY TABLES

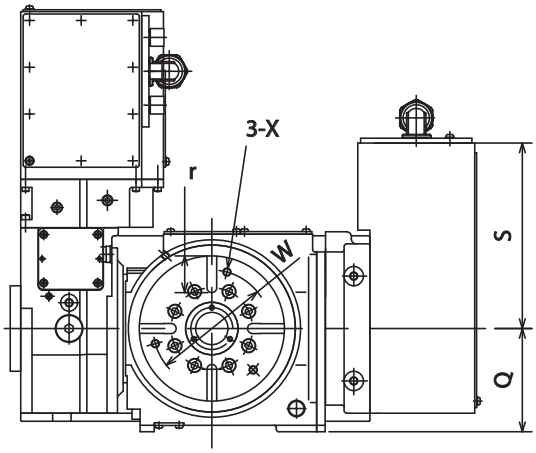

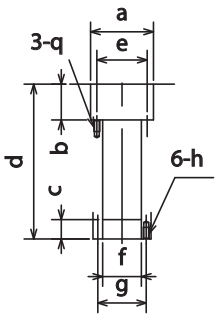

Spindle Hole

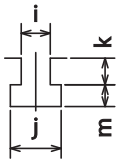

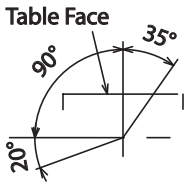

Tilting Angle

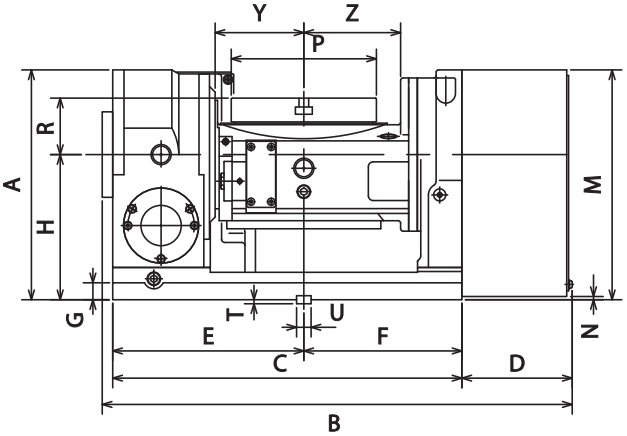

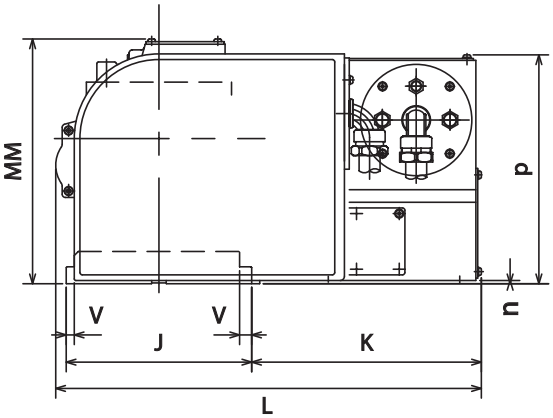

MODEL	A	B	C	D	E	F	G	H	J	K
TT182	11.22	22.95	17.05	5.39	9.33	7.72	.83	7.09	9.06	11.22

L	M	N	P	Q	R	S	T	U	V	W
20.79	11.22	.16	7.09	5.04	2.76	9.06	.20	.7087 h7	.39	5.71

X	Y	Z	MM	a	b	c	d	e
M10	4.33	4.72	11.97	2.5591 H7	1.46	.79	6.30	2.05

f	g	h	i	j	k	m	n	p	q	r
1.5748 H8	1.97	M6	.47	.83	.43	.35	.16	11.38	M6	1.79

KITAGAWA
NC TILTING ROTARY TABLES

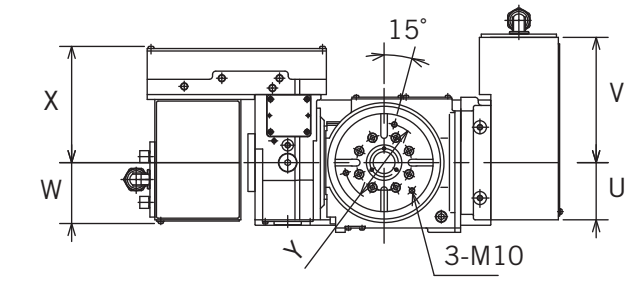

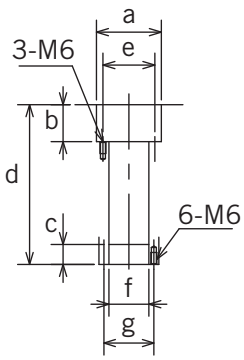

Spindle Hole

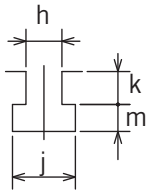

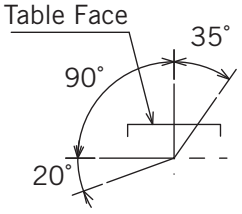

Tilting Angle

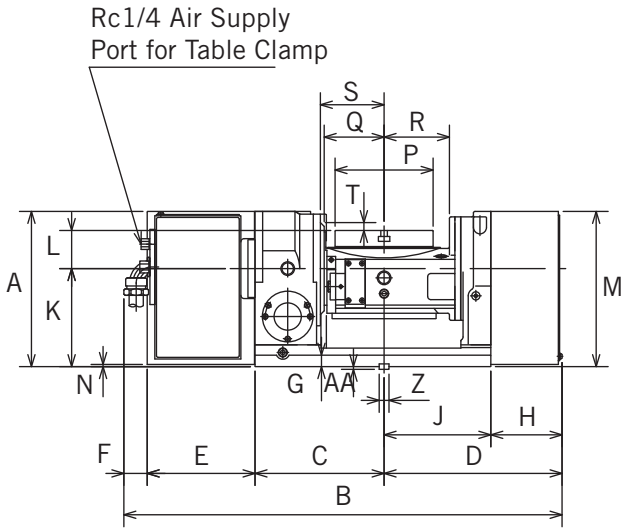

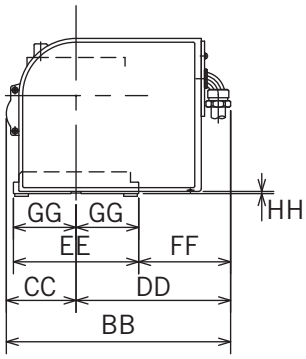

MODEL	A	B	C	D	E	F	G	H	J	K
TW182	11.22	31.69	9.33	12.87	7.80	1.69	.83	5.16	7.72	7.09

L	M	N	P	Q	R	S	T	U	V	W	X
2.76	11.22	.16	7.09	4.33	4.72	4.61	.57	4.13	9.06	4.41	8.39

Y	Z	AA	BB	CC	DD	EE	FF	GG	HH
5.71	.7087 h7	.20	16.22	5.04	11.18	9.06	6.65	4.53	.16

a	b	c	d	e	f	g	h	j	k	m
2.5591 H7	1.46	.79	6.30	2.05	1.5748 H8	1.97	.47	.83	.43	.35

KITAGAWA
NC TILTING ROTARY TABLES

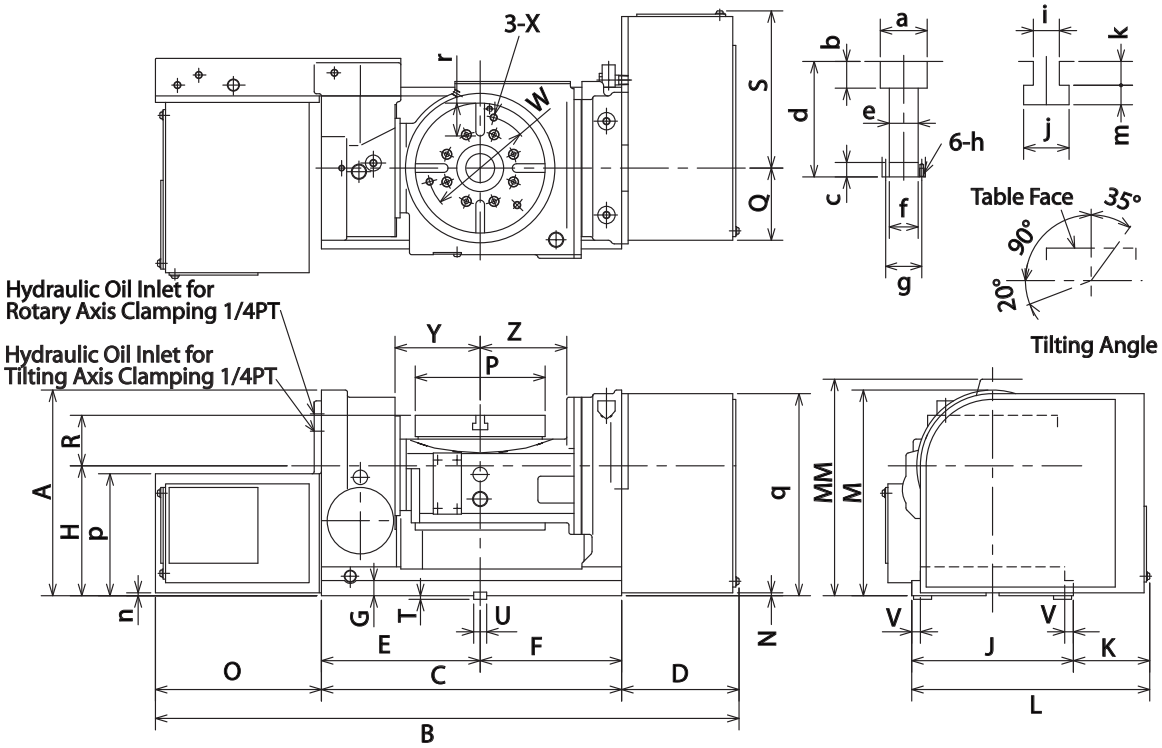

MODEL	A	B	C	D	E	F	G	H	J	K
TTS251	13.78	38.11	20.55	6.22	11.42	9.13	.98	8.86	10.63	5.63
TTS321	16.54	39.33	24.21	7.17	13.46	10.75	1.18	10.04	13.78	3.27

L	M	N	O	P	Q	R	S	T	U	V	W
17.05	14.37	.16	11.30	9.84	6.10	2.95	12.13	.20	.7087 h7	.39	8.19
17.05	16.54		7.95	12.60	6.89	3.74	12.13		.7087 h7	.39	—

X	Y	Z	MM	a	b	c	d	e	f
M12	5.71	5.51	14.37	3.9370 H7	1.34	.79	7.26	2.76	2.7559 H8
—	6.97	6.89	17.20	5.3150 H7	1.77		8.82	4.35	4.3307 H8

g	h	i	j	k	m	n	p	q	r
3.27	M8	.47	.83	.43	.35	.16	8.43	14.37	2.46
4.88	8-M8	.55	.98	.51	.39		12.99	16.54	2.95

Note: AB25T airboosters are not shown in the diagram.

KITAGAWA
NC TILTING ROTARY TABLES

LOAD CAPACITIES

	PERMISSIBLE LOAD			MAX. MACHINE FORCE			MAX. TORQUE CAPACITY*
	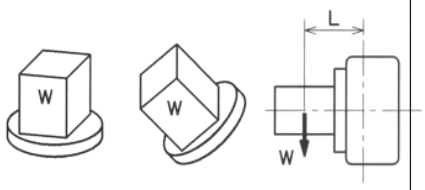			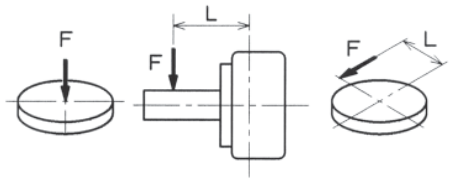			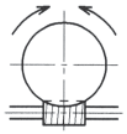
MODEL	lb.	lb.	ft-lb.	lb.	ft-lb.	ft-lb.	ft-lb.w
TW2180	66	66	87	1124	590	243	184

Note: Clamping force is based on air pressure at 71 PSI.
Note: * means maximum torque capacity of worm gear per 1rpm table rotation.

GUARANTEED ACCURACIES

ITEM	DESCRIPTION OF INSPECTION	GUARANTEED ACCURACY
1	Flatness of Table Face	*.0004
2	Parallelism Between Table Face and Base	*.0008
3	Run-out of Table Face in Rotation	.0006
4	Concentricity of Center Hole	.0008
5	Parallelism Between Center of Tilting Axis and Base	*.0008
6	Parallelism Between Table Face and Guide Blocks	*.0008
7	Difference of Center Height	*.0008
8	Difference of Height between each Table Face and Base	.0008
9	Difference between Guide Blocks and each Table Surface	.0008
10	Indexing Accuracy (second)	30
11	Indexing Accuracy (second)	60

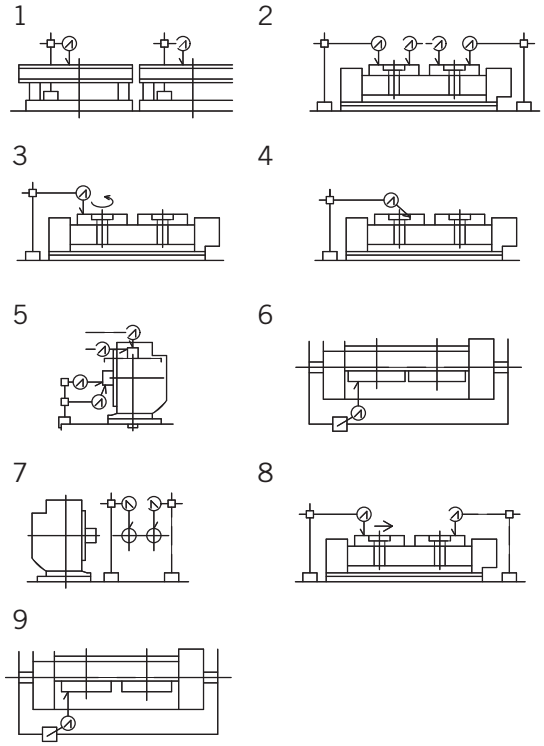

Note: * means measurement is taken on overall length.

KITAGAWA
NC TILTING ROTARY TABLES

- **BUILT-IN AIRBOOSTER COMES STANDARD ON THE TILTING AXIS**

MODEL		TW2180
Table Diameter		7.09
Table Height in Horizontal		9.45
Center Height at 90˚ tilted		7.87
Overall Height at 90˚ tilted		12.01
Thru Hole Diameter		1.57
Width of T Slot		—
AC Servo Motor	Fanuc	α2/5000i, α4/5000iS
	Meldas	HA-33NC-TS
	Yasnac	SGMAS-08, SGMAH-08
	OSP	BL-MC24J
Gear Ratio	Rotary Axis	1/90
	Tilting Axis	1/180
**Maximum R.P.M.	Rotary Axis	33.3
	Tilting Axis	16.6
Indexing Accuracy (sec)	Rotary Axis	30
	Tilting Axis	60
Repeatability (sec)	Rotary Axis	4
	Tilting Axis	4
*Clamping Force (ft-lb.)	Rotary Axis	295 (Pneumatic)
	Tilting Axis	590 (Air/Hydraulic)
Permissible Load (lb.)	Rotary Axis	66
	Tilting Axis	
Maximum Work Inertia (lb.-in-sec^2)		1.06
Weight (lb.)		543

Note: * means clamping force is based on air pressure at 71 PSI.
Note: Recommended oil is Mobil Vactra No.1.
Note: ** means maximum RPM is obtained with motor speed at 3,000 rpm.

KITAGAWA
NC TILTING ROTARY TABLES

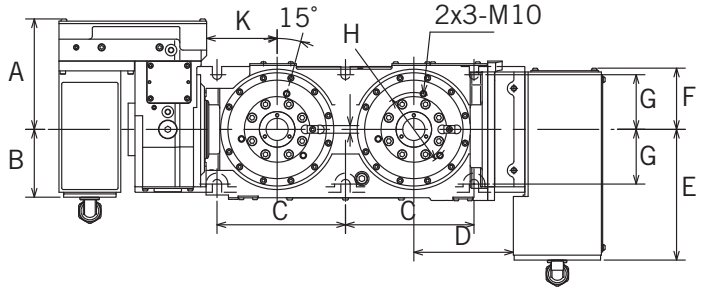

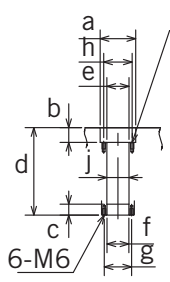

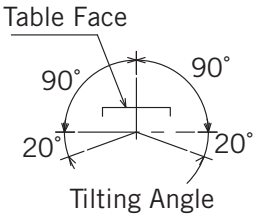

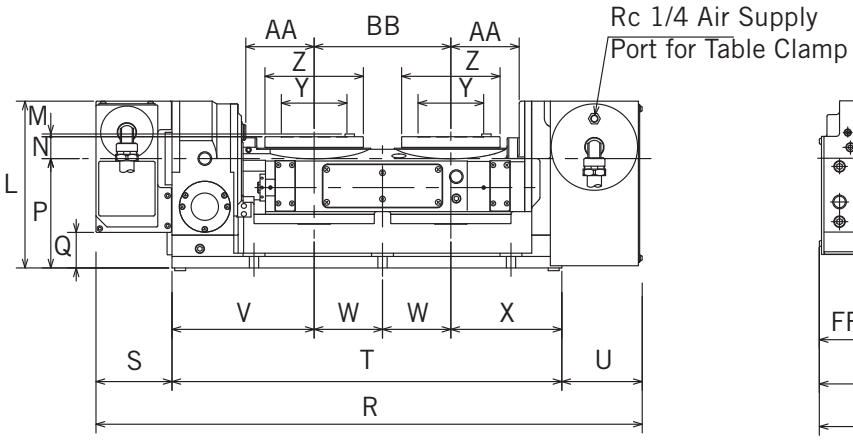

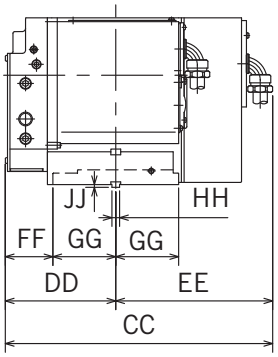

MODEL	A	B	C	D	E	F	G	H	K	L
TW2180	7.95	4.88	9.25	7.17	9.41	4.41	3.94	5.31	5.08	12.01

M	N	P	Q	R	S	T	U	V	W	X
.20	1.57	7.87	2.56	39.33	5.47	28.07	5.79	10.24	4.92	7.99

Y	Z	AA	BB	CC	DD	EE	FF	GG	HH	JJ
4.72	7.09	4.92	9.84	19.25	7.95	11.30	3.43	4.53	.5511 h7	.20

a	b	c	d	e	f	g	h	j
2.5591 H7	1.06	.79	6.30	1.59	1.5748 H8	1.97	2.05	1.59

KITAGAWA NC ROTARY TABLES AND AC SERVO MOTORS

MODEL/KIW NO.	FANUC	MITSUBISHI	YASNAC	OKUMA
TC-5C-1/TC100	α1/5000i	HA33NT	SGMP-04	BL-MC24J
TC-5C-1A/TC100A				
TC-5C-2A/TC2100A	α2/5000i	HA-FF63	SGMAH-08	
TC-5C-3A/TC3100A	α2/5000i		SGMAH-08	
TT101 ROTATING	α2/5000i	HA-FF33 HA33NT	SGMP-04 SGMAH-04	BL-MC24J
TT101 TILTING	α2/5000i α2/3000	HA-FF63 HA33NT	SGM-08 SGMAH-08	
TT140	α2/5000i	HA-FF63 HF-H75T	SGMAH-08	
TT(TW)182	α2/5000i	HA-FF63, HA33NC-TS	SGMAS-08 SGMAH-08	
TW2180	α2/5000i α4/5000iS	HA33NC-TS		
TM-100-2R/TM2100	α4/4000i α3/3000	HC-53T HA40N	SGMG-05 SGMAH-09	BL-MC25J
TM-100-3R/TM3100				
TM-160-2R/TM2160				
TM-160-3R/TM3160				
MR120	α2/5000i α2/3000	HA-FF63 HA33NT HF-H75S	SGM-08 SGMAH-08	BL-MC24J
MR160	α2/5000i α2/3000		SGM-08 SGMAH-08	BL-MC24J
MR200	α4/4000i α3/3000	HA40N HC-53T HF-H54T HF54T	SGMG-05 SGMG-09 SGMAH-09	BL-MC25J
MR250	α4/4000i α3/3000	HA40N, HC-103T HF-H104T	SGMG-05 SGMG-09 SGMAH-09	BL-MC25J

Note: Fanuc DC, Kollmorgen Siemens, etc. can be mounted on rotary tables upon your request.
Note: Larger motor cases may require for mounting Fanuc α, Mitsubishi HA, and Yasnac USA FED motors, etc. on some rotary table models. Consult Tenara Sales Engineer for details.

KITAGAWA NC ROTARY TABLES AND AC SERVO MOTORS

TMX160 TBX160	α2/5000i α2/3000	HA-FF63 HA33NC-TS HA33NT	SGM-08 SGMAH-05 SGMAH-08	BL-MC24J
TMX200 TBX200	α4/4000i α3/3000	HC-53T HA40N	SGMG-05 SGMAH-09	BL-MC25J
TMX250 TT(S)251 TBX250	α4/4000i α6/3000	HC-103T HA80N	SGMG-09 SGMGH-09	BL-MC50J
MR320 TT(S)321 TRX320 TBX320	α8/3000i α6/3000	HA80N HC-103T HF-H104T	SGMG-09 SGMGH-09 SGMAH-13	BL-MC50J
TR401 TR500	α12/3000i α12/2000	HA100N HC-202S	SGMG-20 SGMAH-20	BL-MC100J
TR630	α22/3000i α22/2000	HC-352S HA200N	SGMG-30 SGMAH-30	BL-MC200J

Note: Fanuc DC, Kollmorgen Siemens, etc. can be mounted on rotary tables upon your request.
Note: Larger motor cases may require for mounting Fanuc α, Mitsubishi HA, and Yasnac USA FED motors, etc. on some rotary table models. Consult Tenara Sales Engineer for details.

KITAGAWA NC CONTROLLER
MAC mini i INDEPENDENT CONTROLLER

- **ADVANCED INTEGRATED PROGRAMMING AND OPERATING SYSTEM (IPOS MODE)**
  Direct control of MAC mini series controllers with host computers (CNC, NC, etc.) through RS-232C Serial Port. One RS-232C Serial Port can control one or two MAC mini controllers.
- **M-SIGNAL MODE OPERATION**
  Indexing, Zero Return, etc. from the machine control with one M Signal interfaced. Conversion between IPOS MODE and M Signal MODE by simple parameter changes.
- **POWERFUL DRIVING TORQUE**
  A maintenance free AC Servo Motor with absolute pulse coder, provides powerful driving torqe.

Note: Mac Mini i is used for rotary tables up to #320.

- **PRECISE INDEXING**
  Minimum resolution of 0.001˚
- **HIGH SPEED TABLE ROTATION**
  High speed indexing with AC Servo Motor
- **FULL DIGITAL SERVO CONTROL**
  Guarantees superb indexing accuracy and stable performance.
- **DUST PROOF CONTROL BOX**
- **PLENTY OF PROGRAMMING SPACE**
  Large programming capacity of total 2,000 blocks, 500 blocks x 1 channel and 100 blocks x 15 channels.
- **2 AXES CONTROLLER FOR TILTING ROTARY TABLE AVAILABLE UPON REQUEST**

KITAGAWA NC CONTROLLER - SPECIFICATIONS

ITEM	Name of Function	Description of Function
1	Integrated Programming and Operating System (IPOS)	IPOS Mode Operation through Host Computers (CNC, NC, etc)
2	M - Signal Mode Operation	Easy Interface with the Machine Control for M - Signal Operation with One M Code
3	Minimum Resolution	0.001 Degrees
4	Max. Programmable Angle	±825 Rotations and ±999.999 Degrees
5	Number of Divisions	2 - 999
6	Program Capacity	500 Blocks x 1 Channel, 100 Blocks x 15 Channels (N00 - N99 x CH00 - CH15)
7	Input Method	MDI Keyboard
8	Command Method	Incremental (G91) / Absolute (G90)
9	Zero Return	*Establishes both Machine and Work Origin
10	Manual Feed	Rapid, Fine and Step Feed
11	Emergency Stop	*Stops All Functions
12	Feed Hold	*Stops Table Rotation Temporarily
13	Jump Function	Skips and Goes to Sub-programs
14	Repeat Function	Repeats up to 8 Times between Programs specified
15	Step-out Function from Loop	Step-out form Loop by External Command
16	Buffer Function	Reads One Block Ahead and Operates Continuously
17	Key-lock Function	Avoids Pushing Wrong Functional Button in error
18	G Function	Dwell, Brake On/Off, etc. (G04 - G99)
19	Uni-directional Function	Positioning from One Direction (CW or CCW) only
20	Software Limit Function	Setting Value of Software Limit from Machine Origin
21	Stop Over-shooting	Prevents Over-shooting from the Preset Position
22	Controlling Finish Signal	Outputs Selected Finish Singal (G97, G98, G99)
23	RS232C Interface	Interfacing with PC, etc.
24	Alarm No. Display Function	Display Alarm Code No. for Error
25	Self Diagnosis Function	Displaying Current Condition of Controller
26	Feed Override	5 - 200%
27	External Input Signal	Start, Emergency Stop, Feed Hold, etc.
28	External Output Signal	One Block Finish, Finish, Alarm Output, etc.
29	Servo Motor	Yasnac AC Servo Motor
30	**Hand-Held Pendant	Detachable Hand-Held Pendant for Easy Key Operation
31	Power Input	AC200-220V, 50/60Hz, Single Phase

Note: * means to accept External Commands.
Note: ** means optional feature.

KITAGAWA MACDEX

AC SERVO MOTOR DRIVEN INDEXERS WITH MAC Mini INDEPENDENT CONTROLLER

MODEL NO.	KIW NO.
RS-5C-1	TCM100
RS-5C-1A	TCM100A
RS-5C-2A	TCM2100A
RS-5C-3A	TCM3100A

MODEL NO.	KIW NO.
RS100	RSM100

MODEL NO. • KIW NO.

MRM120
MRM160
MRM200
MRM250
MRM320

NOW INTERFACES WITH KITAGAWA INTEGRATED PROGRAMMING AND OPERATING SYSTEM OR THRU M SIGNAL WITH MAC Mini i CONTROLLER

KITAGAWA MACDEX

AC SERVO MOTOR DRIVEN INDEXERS

MODEL NO.	KIW NO.
RS-5C-1	TCM100
RS-5C-1A	TCM100A
RS-5C-2A	TCM2100A
RS-5C-3A	TCM3100A

MODEL/KIW NO.		RS-5C-1/ TCM100	RS-5C-1A/ TCM100A	RS-5C-2A/ TCM2100A	RS-5C-3A/ TCM3100A
Center Height in Vertical		4.33	4.33	4.33	4.33
Overall Height in Vertical		8.43	8.43	8.27	8.27
Thru Hole Diameter		1.19	1.19	1.19	1.19
Collet Draw Force		1079	1079	1236	1236
Gear Ratio		1/36	1/36	1/60	1/60
*Maximum R.P.M.		83.3	83.3	50	50
Minimum Resolution (Degree)		0.001	0.001	0.001	0.001
Indexing Accuracy (second)		50	50	60	60
Repeatability (second)		±5	±5	±5	±5
Number of Indexing Position		2-999	2-999	2-999	2-999
Permissible Load (lb.)	Horizontal	132	132	132	132
	Vertical	66	66	66	66
Maximum Work Inertia (lb.-in-sec^2)		0.48	0.48	0.48	0.48
Weight (lb.)		53	60	154	220

ITEM	DESCRIPTION OF INSPECTION	GUARANTEED ACCURACY	
		RS-5C-1 RS-5C-1A	RS-5C-2A RS-5C-3A
1	Run-out of Table I.D.	.0004	.0004
2	Run-out of Table Face	.0008	.0008
3	Parallelism Between Spindle and Base	.0008	.0008
4	Indexing Accuracy (second)	50	60
5	Repeatabillity (second)	±5	±5

1

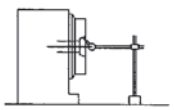

2

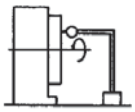

3

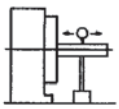

Note: * means maximum RPM is obtained with motor speed at 3,000 rpm.
Note: See accessory chart (p236) for complete listing of optional accessories.
Note: RS-5C-1 furnished with manual 5C collet closer. RS-5C-1A, -2A, & -3A furnished with pneumatic 5C collet closer.

KITAGAWA MACDEX
AC SERVO MOTOR DRIVEN INDEXERS

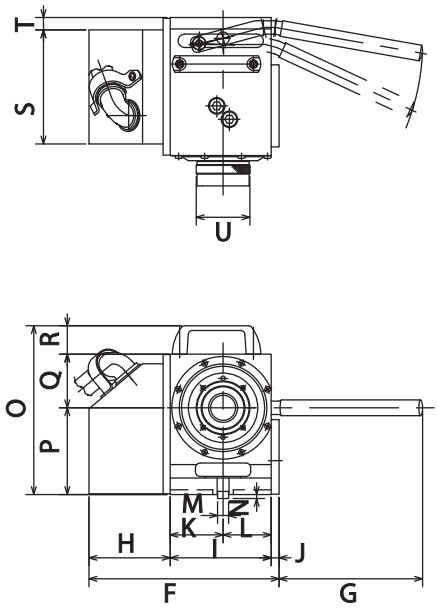

RS-5C-1

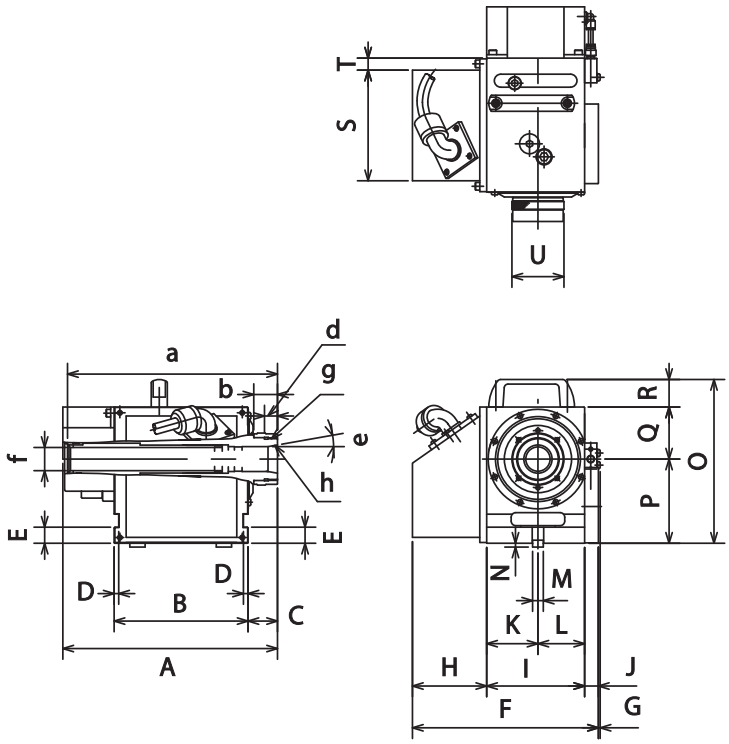

RS-5C-1A

MODEL	KIW NO.	A	B	C	D	E	F	G	H	I	J	K	L
RS-5C-1	TCM100	8.41	6.89	1.52	.24	.83	9.25	7.17	3.82	5.04	.71	2.64	2.40
RS-5C-1A	TCM100A	11.04	6.89	1.52	.24	.83	9.57	.09	3.82	5.04	.71	2.64	2.40

M	N	O	P	Q	R	S	T	U	a	b	d	e	f	g
.5512 h7	.20	8.43	4.33	2.68	1.42	5.69	.62	2.68	8.15	1.22	.67	10°	1.19	2 3/16-UNS
.5512 h7	.20	8.43	4.33	2.68	1.42	6.85	.04	2.68	10.80	1.22	.67	10°	1.19	2 3/16-UNS

KITAGAWA MACDEX

AC SERVO MOTOR DRIVEN INDEXERS

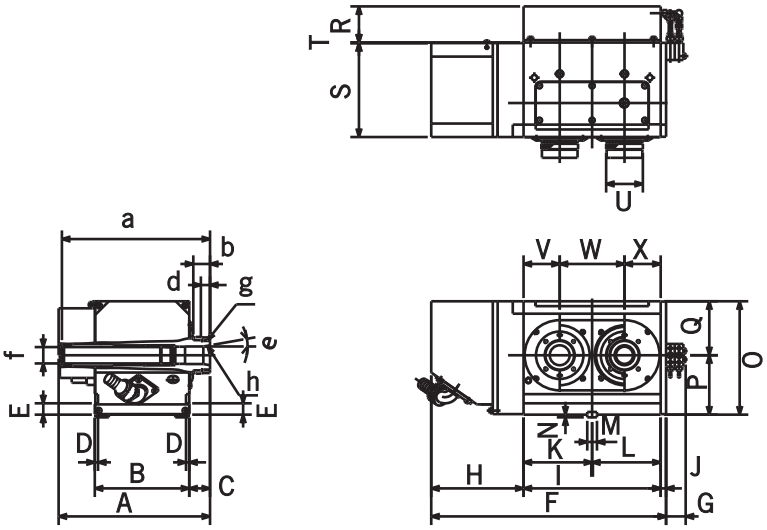

RS-5C-2A

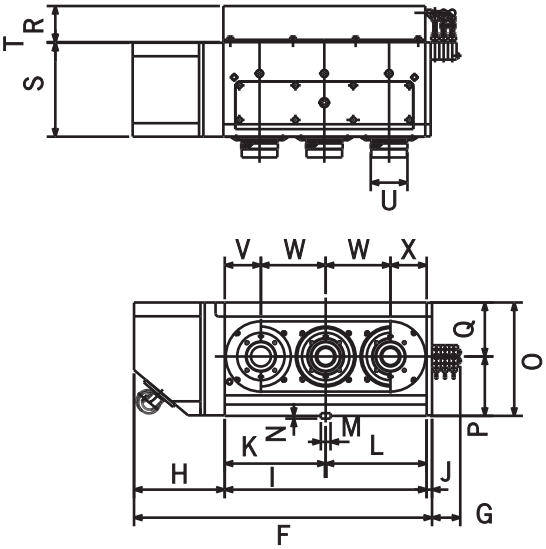

RS-5C-3A

MODEL	KIW NO.	A	B	C	D	E	F	G	H	I	J
RS-5C-2A	TCM2100A	11.04	6.89	1.52	.24	.83	17.13	1.43	6.73	10.00	.39
RS-5C-3A	TCM3100A	11.04	6.89	1.52	.24	.83	21.73	2.06	6.73	14.72	.39

K	L	M	N	O	P	Q	R	S	T	U
5.00	5.00	.7089 h7	.20	8.27	4.33	3.94	2.64	6.85	.04	2.68
7.36	7.36	.7089 h7	.20	8.27	4.33	3.94	2.64	6.85	.04	2.68

V	W	X	a	b	d	e	f	g
2.64	4.72	2.64	10.80	1.22	.67	10°	1.19	2 3/16-UNS
2.64	4.72	2.64	10.80	1.22	.67	10°	1.19	2 3/16-UNS

KITAGAWA MACDEX

AC SERVO MOTOR DRIVEN INDEXERS

MODEL/KIW NO.	RS100/RSM100
Center Height in Vertical	4.33
Overall Height in Vertical	5.51
Thru Hole Diameter	1.26
AC Servo motor	400W
Gear Ratio	1/36
Table Rotating Direction	CW or CCW
*Maximum R.P.M.	83.3
Minimum Resolution (Degree)	0.001
Number of Indexing Position	2-999
Maximum Workpiece Diameter	4.13
Indexing Accuracy (second)	50
Repeatability (second)	±5
Clamping Force (ft-lb.)Air Pressure at 71PSI	59
Maximum Work Inertia (lb.-in-sec^2)	0.48
Weight (lb.)	53

ITEM	DESCRIPTION OF INSPECTION	GUARANTEED ACCURACY
1	Run-out of Table Bore	.0004
2	Run-out of Table Face	.0004
3	Parallelism Between Table Face and Base at 6” in Horizontal	.0008
4	Parallelism Between Spindle and Base upto 6” Long in Vertical	±.0008
4	Indexing Accuracy (second)	50
5	Repeatabillity (second)	±5

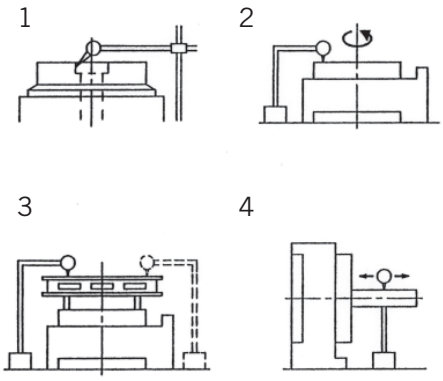

Note: * means maximum RPM is obtained with motor speed at 3,000 rpm.
Note: See accessory chart (p236) for complete listing of optional accessories.

KITAGAWA MACDEX

AC SERVO MOTOR DRIVEN INDEXERS

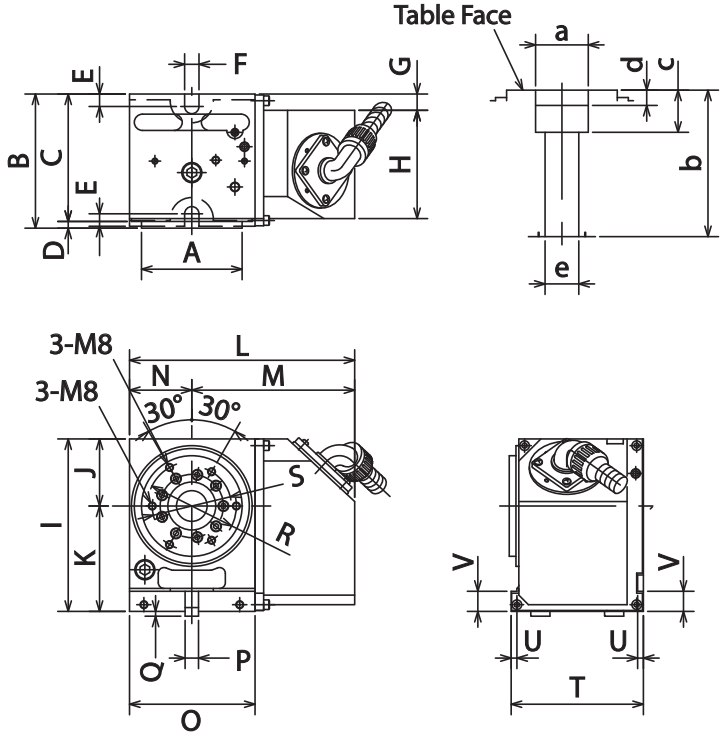

MODEL	KIW NO.	A	B	C	D	E	F	G	H	I	J	K	L
RS100	RSM100	4.13	5.51	5.24	.28	.51	.59	.67	4.45	7.09	2.76	4.33	9.25

M	N	O	P	Q	R	S	T	U	V	a	b	c	d	e
6.69	2.56	5.16	.5512 h7	.20	3.66	3.25	5.43	.24	.83	1.9685 H7	5.47	1.57	.57	1.26

5C COLLET CLOSERS

MANUAL TYPE

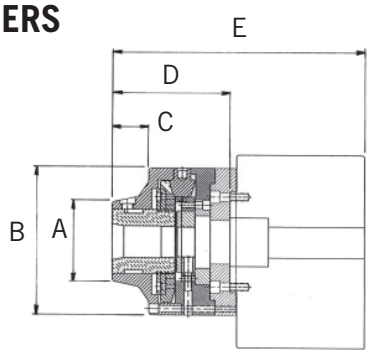

MODEL	A	B	C	D	E
5C-M	3.27	6.00	1.50	4.81	10.33

PNEUMATIC TYPE

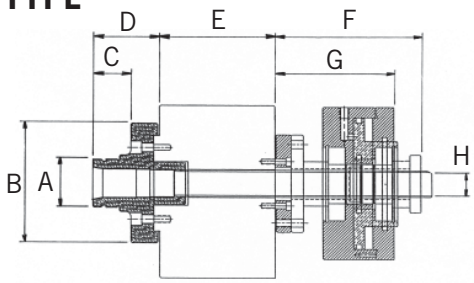

MODEL	A	B	C	D
5C-P	2.19	5.45	1.75	3.08

E	F	G	H
5.24	6.60	5.36	1.06

KITAGAWA MACDEX

AC SERVO MOTOR DRIVEN INDEXERS

MODEL		MRM120	MRM160	MRM200	MRM250	MRM320
Table Diameter		5.04	6.5	7.95	9.84	12.6
Center Height in Vertical		4.72	5.51	5.51	7.09	8.86
Table Height in Horizontal		5.52	5.91	7.01	7.29	8.47
Overall Height in Vertical		8.07	9.37	10.59	12.01	15.16
Thru Hole Diameter		1.26	1.57	1.77	2.76	4.13
Gear Ratio		1/60	1/72	1/90	1/90	1/120
*Maximum R.P.M.		50	41.6	33.3	33.3	16.6
Minimum Resolution (Degree)		0.001	0.001	0.001	0.001	0.001
Indexing Accuracy (sec)		20	20	20	20	20
Repeatability (sec)		±2	±2	±2	±2	±2
**Clamping Force (ft-lb.)		110	229	258	443	885
Permissible Load (lb.)	Horizontal	264	353	441	551	772
	Vertical	132	176	220	276	397
Maximum Work Inertia (lb.-in-sec^2)		1.91	4.51	8.85	17.26	39.67
Weight (lb.)		62	88	108	187	287

Note: * means maximum RPM is obtained with motor speed at 3,000 rpm.
Note: ** means clamping force is based on air pressure at 71 PSI.
Note: See accessory chart (p236) for complete listing of optional accessories.

ITEM	DESCRIPTION OF INSPECTION	GUARANTEED ACCURACY
1	Run-out of Table I.D.	.0004
2	Run-out of Table Face	.0008
3	Parallelism Between Table Face and Base	.0008
4	Parallelism Between Spindle and Base	.0008
5	Parallelism Between Spindle and Guide Block	.0008
6	Indexing Accuracy	20
7	Repeatabillity	±2

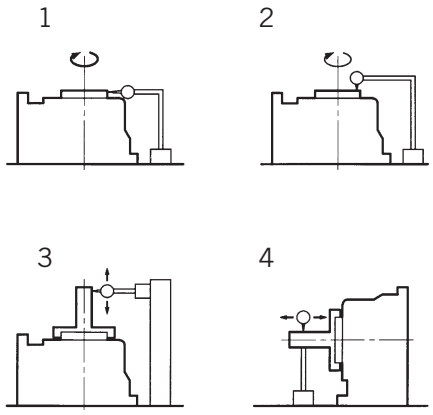

Note: Measurement is taken at 6" length from face or center of the table.

KITAGAWA MACDEX

AC SERVO MOTOR DRIVEN INDEXERS

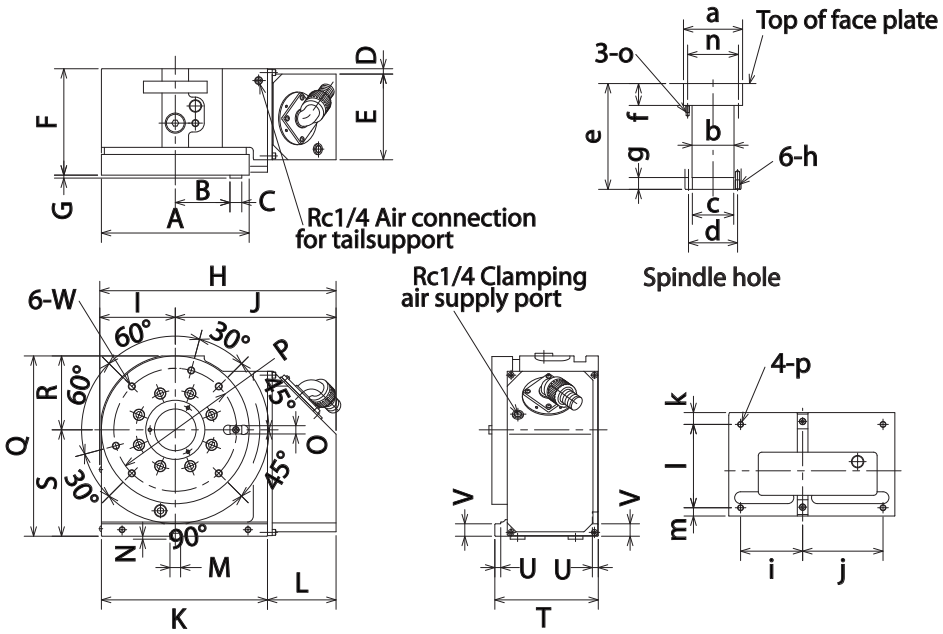

MODEL	A	B	C	D	E	F	G	H	I	J
MRM120	5.04	1.65	.79	.40	4.76	5.36	.16	12.44	3.35	9.09
MRM160	6.50	1.97		.35	4.84	5.71	.20	13.27	3.62	9.65
MRM200	7.95	2.64		.27	5.79	6.81		14.69	4.41	10.28
MRM250	9.84	3.64		.26	5.81	7.09		15.75	5.04	10.71
MRM320	12.6	4.92		.59	6.02	8.27		16.81	6.30	10.51

K	L	M	N	O	P	Q	R	S	T
7.05	5.39	.5512 h7	.20	.3937 h7	4.45	8.07	3.35	4.72	5.16
7.91	5.28	.7087 h7		.5512 h7	5.71	9.37	3.86	5.51	5.59
10.16	4.53				6.69	9.84	4.33	5.51	6.61
11.06	4.57				8.19	12.01	4.92	7.09	6.89
12.60	4.21				11.10	15.16	6.30	8.86	7.87

U	V	W	a	b	c	d	e	f
.39	.83	M8	1.9685 H7	1.28	1.2598 H8	1.61	5.33	.94
		M10	1.9685 H7	1.59	1.5748 H8	1.97	5.67	1.10
		M10	2.5591 H7	1.81	1.7717 H8	2.17	6.77	1.38
		M12	3.9370 H7	2.80	2.7559 H8	3.27	7.05	1.46
	1.18	M12	5.1181 H7	4.17	4.1339 H8	4.80	8.24	1.34

g	h	i	j	k	l	m	n	o	p
.79	M5	2.36	2.36	.83	3.78	.55	1.61	M5	M10
	M6	2.76	3.70	.98	4.06	.55	—	—	
	M6	3.35	5.00	.83	5.24	.55	2.09	M5	
	M8	4.13	5.35	.79	5.55	.55	3.39	M6	
	M10	4.72	4.72	.63	6.65	.59	4.57	M6	M16

KITAGAWA

DM SERIES NC ROTARY TABLES FOR WIRE EDM

MODEL NO.
DM100

- **EXCLUSIVELY ENGINEERED FOR WIRE EDM APPLICATIONS**
- **LARGE THRU-HOLE**
- **COMPACT AND LIGHT WEIGHT DESIGN**
- **ANTI-RUST, STAINLESS STEEL BODY**
- **PERFECTLY SEALED AND AIR-PURGED**
- **STATE-OF-THE-ART CURRENT COLLECTOR SYSTEM FOR SEISURE FREE OERPATION**

MODEL		DM100
Table Diameter		3.94
Center Height in Vertical		2.56
Overall Height in Vertical		5.91
Thru Hole Diameter		1.57
AC Servo Motor	Fanuc	A06B-0115-B075#0008 ßM0.5/4000
	Mitsubishi	HC-KFS23K-S9
Gear Ratio		1/120
Maximum R.P.M.		3.0
Minimum R.P.M.		0.2
Minimum Resolution (Degree)		0.001
Indexing Accuracy (Second)		30
Repeatability (Second)		5
Permissible Load Vertical (lb.)		44
Maximum Work Inertia (lb.-in-sec^2)		0.00048
Weight (lb.)		44

KITAGAWA

DM SERIES NC ROTARY TABLES FOR WIRE EDM

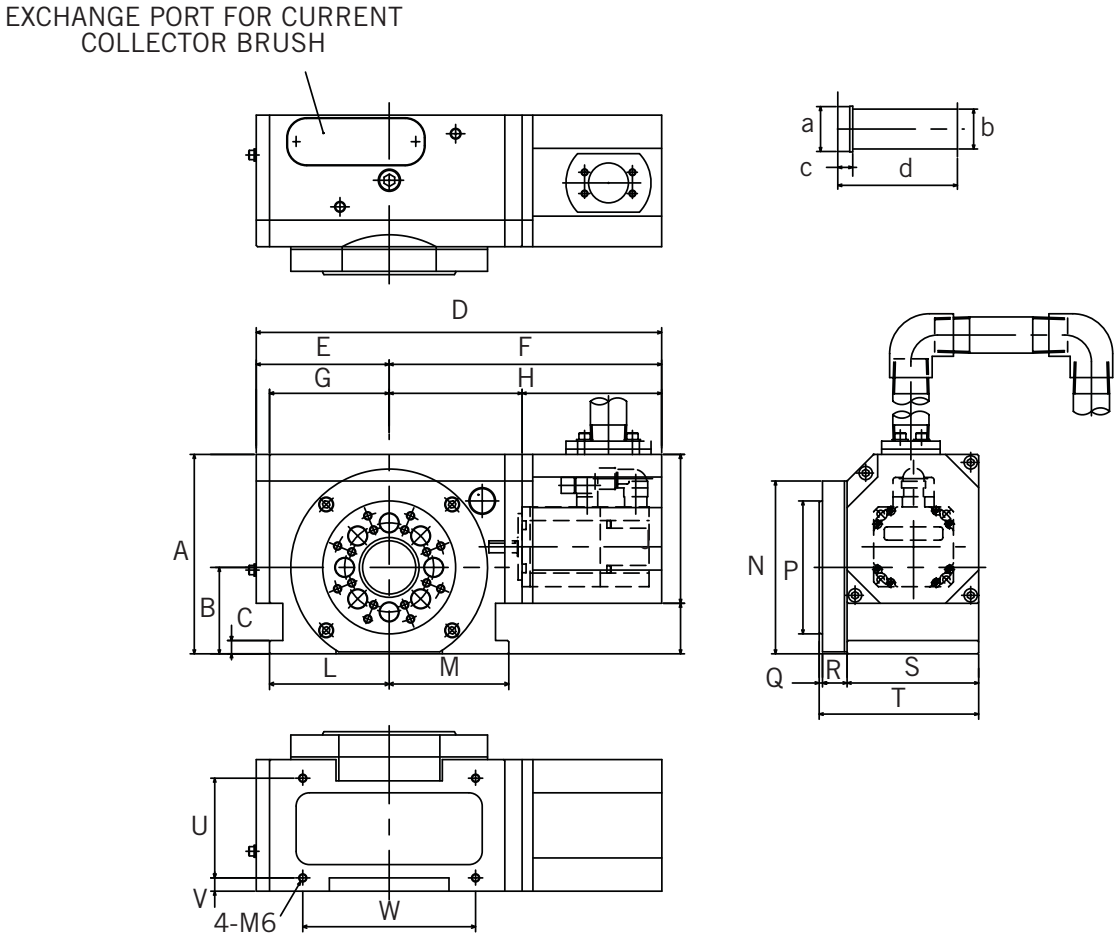

MODEL	A	B	C	D	E	F	G	H	I
DM100	5.91	2.56	.39	12.01	3.94	8.07	3.54	3.94	4.13

J	K	L	M	N	P*	Q	R	S
4.41	1.50	3.54	3.54	5.12	3.94	.10	.73	3.90

T	U	V	W	a	b	c	d
4.72	2.95	.39	5.12	1.7717 H7	1.57	.59	4.72

Note: * means P dimension is the face plate diameter.

TAILSTOCKS

KITAGAWA NC ROTARY TABLES

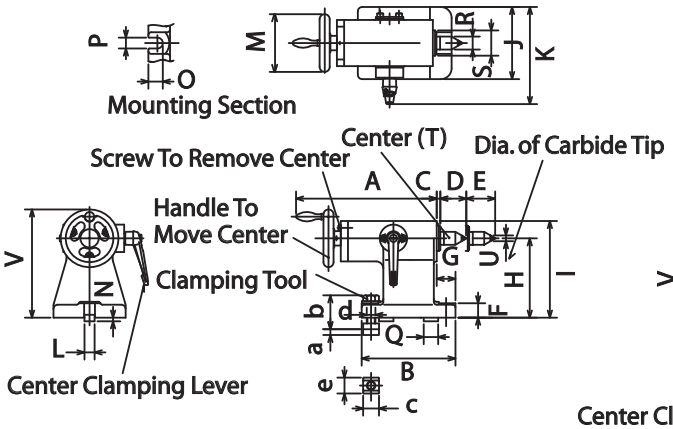

FIG. 1

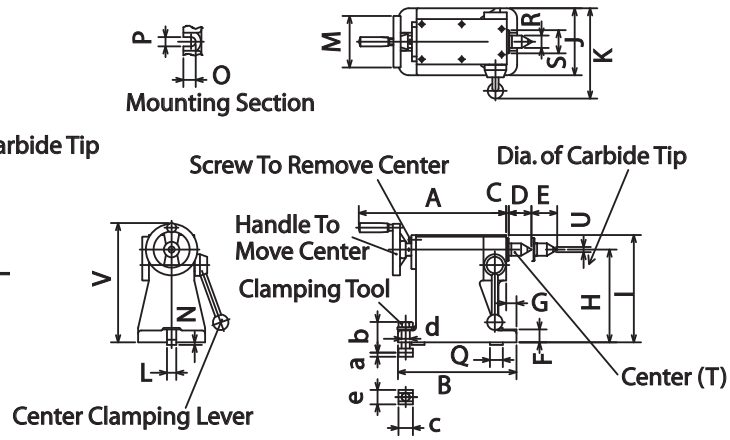

FIG. 2

MODEL	KIW NO.	A	B	C	D	E*	F	G	H	I	J	K
TS100	RS100RN	7.68	5.12		1.42	1.57	.79	1.02	4.33	5.28	3.94	5.31
—	MR120RN	7.28	5.12		1.42	1.18	.79	1.02	4.72	5.67	3.94	5.31
—	MR160RN	7.28	5.51		1.42	1.18	.98	1.22	5.51	6.46	4.72	5.70
TS160	TS160RN	11.26	8.66	.20	1.73	1.97	.79	.59	4.72	5.89	4.33	6.30
TS200	MR200RN,TS200RN	11.26	9.06		1.73	1.97	.98	.79	5.51	6.67	4.72	6.42
TS250	MR250RN,TS250RN	11.26	9.06		1.73	1.97	.98	.79	7.09	8.25	5.12	6.93
TS320	MR320RN,TS320RN	11.26	9.06		1.73	1.97	.98	.79	8.86	10.02	5.91	7.32
TS400	TS400RN	16.30	12.60	.12	2.06	2.76	1.38	.67	10.04	12.01	8.27	10.28
TS500	TS500RN	16.30	12.60	.12	2.06	2.76	1.38	.67	12.20	14.17	8.27	10.28
TS630	TS630RN	18.15	12.99	.20	2.76	3.15	1.57	.59	15.75	17.72	10.24	12.48

L	M	N	O	P	Q	R	S	T	U**	a	b	c	d	e	FIG.
.5512 h7	3.15		.79	.59	.79	.71	1.38	MT-2	.31	.34	1.85	1.12	.47	.87	1
.5512 h7	3.15		.79	.59	.79	.71	1.38	MT-2	.31	.34	1.85	1.12	.47	.87	1
	3.15		.97			.71	1.38	MT-2	.31		2.28				1
	3.94		.87			.95	1.77	MT-3	.39		2.15				2
	3.94		.97			.95	1.77	MT-3	.39		2.34				2
	3.94	.20	.97			.95	1.77	MT-3	.39		2.34		.63		2
.7087 h7	3.94		.97	.75	.98	.95	1.77	MT-3	.39	.43	2.34	1.18		1.12	2
	5.51		1.12			1.24	2.56	MT-4	.55		2.74				2
	5.51		1.12			1.24	2.56	MT-4	.55		2.74				2
	6.30		1.28			1.76	3.15	MT-5	.71		3.05		.79		2

Note: * means maximum dimension
Note: ** means in diameter.
Note: "T" means the size of Morse Taper of Center.

AIR/HYDRAULIC TAILSTOCKS

KITAGAWA NC ROTARY TABLES

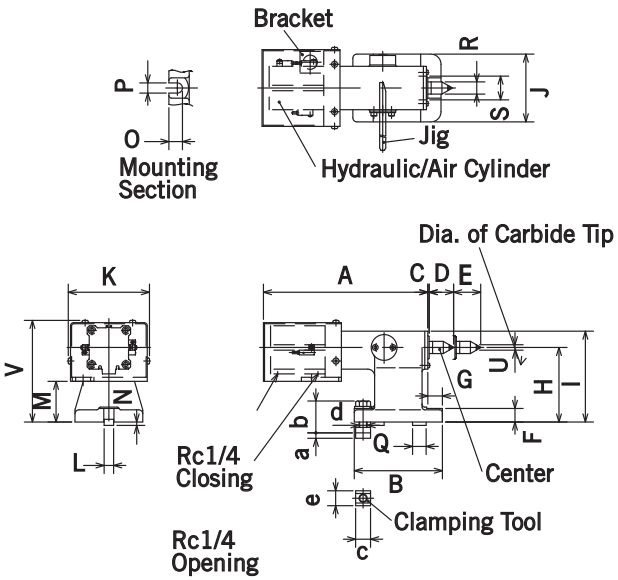

FIG. 1

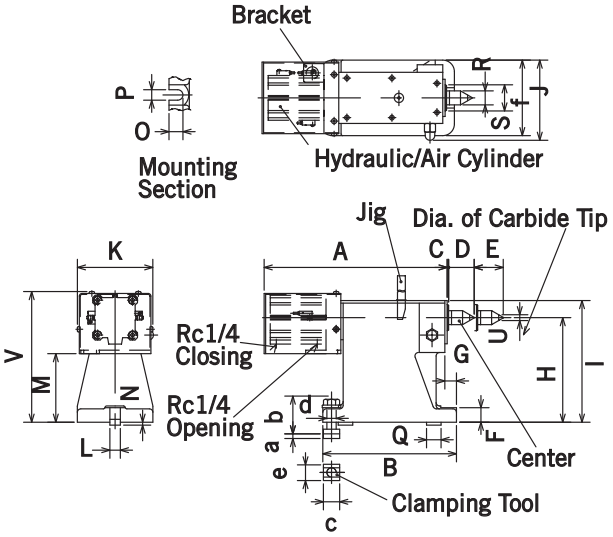

FIG. 2

MODEL	KIW NO.	A	B	C	D	E*	F	G	H	I	J
TS100 RSA(H)	RS100A(H)N,RS100RA(H)N	10.08	5.12	1.42	5.28	1.57	.79	.85	4.33	3.94	—
—	MR120A(H)N,MR120RA(H)N	9.29	5.12	1.42	5.67	1.18	.79	.85	4.72	3.94	—
—	MR160A(H)N,MR160RA(H)N	9.29	5.51	1.42	6.46	1.18	.98	1.04	5.51	4.72	—
TS160 RSA(H)	TS160A(H)N	12.72	8.66	1.73	5.89	1.97	.79	.43	4.72	4.33	4.84
TS200 RSA(H)	TS200A(H)N	12.72	9.06	1.73	6.67	1.97	.98	.63	5.51	4.72	4.96
TS250 RSA(H)	MR250A(H)N,TS250A(H)N	12.72	9.06	1.73	8.25	1.97	.98	.63	7.09	5.12	5.16
TS320 RSA(H)	MR320A(H)N,TS320A(H)N	12.72	9.06	1.73	10.02	1.97	.98	.63	8.86	5.91	—

K	L	M	N	O	P	Q	R	S	T	U**	V	a	b	c	d	e	FIG.
.5512 h7		4.72	.59	.79	.79	.71	1.38	5.91	2.36	.31	.08	.34	1.85	1.12	.47	.87	1
.5512 h7		4.72	.59	.79	.79	.71	1.38	6.30	2.76	.31	.08	.34	1.85	1.12	.47	.87	1
		4.72		.96		.71	1.38	7.09	3.54	.31	.08		2.28				1
	.20	5.12		.89		.95	1.77	6.50	2.28	.39	.10		2.15				2
.7087 h7		5.12	.75	.96	.98	.95	1.77	7.28	3.07	.39	.10	.43	2.34	1.18	.63	1.12	2
		5.12		.96		.95	1.77	8.86	4.65	.39	.10		2.34				2
		5.12		.96		.95	1.77	10.63	6.42	.39	.10		2.34				2

Note: * means maximum dimension
Note: ** means in diameter.
Note: (H) means hydraulic type

AIR/HYDRAULIC TAILSTOCKS

MULTI-SPINDLE TYPE FOR KITAGAWA NC ROTARY TABLES

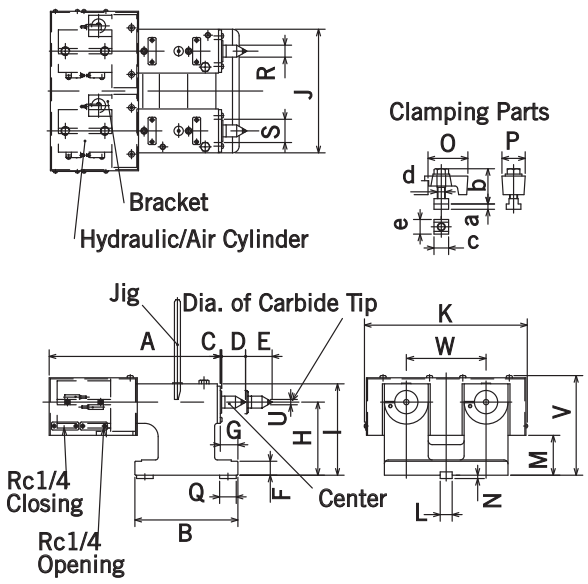

FIG. 1

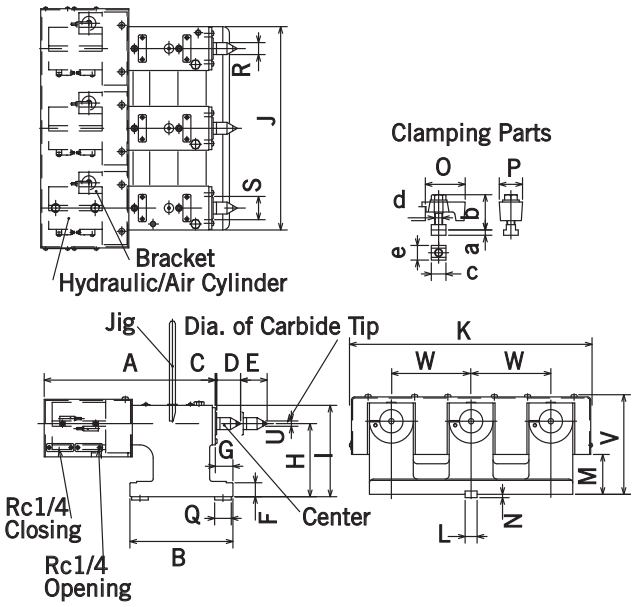

FIG. 2

MODEL	KIW NO.	A	B	C	D	E*	F	G	H	I	J	K
TS100-2RSA(H)	TS2100A(H)N	10.16	6.10	.08	1.42	1.57	.83	1.04	4.33	5.43	7.32	9.65
TS100-3RSA(H)	TS3100A(H)N	10.16							4.33	5.43	12.05	14.37
TS160-2RSA(H)	TS2160A(H)N	10.08							5.51	6.61	10.47	12.60
TS160-3RSA(H)	TS3160A(H)N	10.08							5.51	6.61	18.35	20.47

L	M	N	O	P	Q	R	S	T	U**	V	W	a	b	c	d	e	FIG.
.7087 h7	2.36	.20	2.83	1.77	.98	.71	1.38	MT-2	.31	5.91	4.72	.43	2.62	1.18	.63	1.12	1
	2.36									5.91	4.72						2
	3.15									7.09	7.87						1
	3.15									7.09	7.87						2

Note: * means maximum dimension
Note: ** means in diameter.
Note: (H) means hydraulic type.
Note: "T" means the size of Morse Taper of Center. fonts
Note: The dimensions between center of spindles are 4.72" for models TS100-2RSA(H) & TS100-3RSA(H) and 7.87" for models TS160-2RSA(H) & TS160-3RSA(H).

TAIL SUPPORTS
FOR KITAGAWA NC ROTARY TABLES

- **Designed for cradle type rotary tables or indexers**
- **Strong clamping force for heavy duty machining**

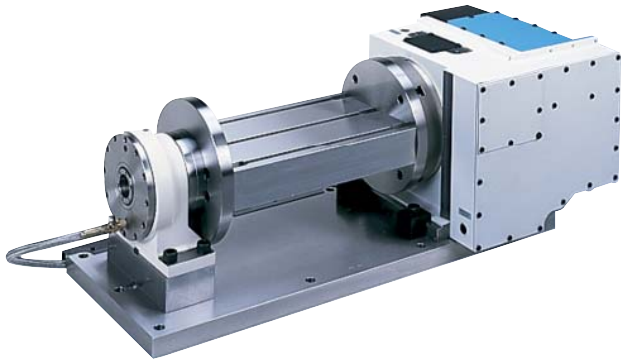

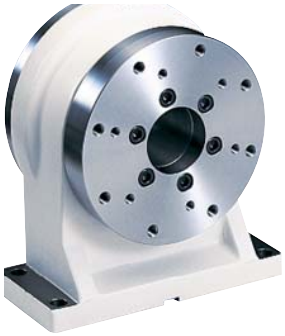

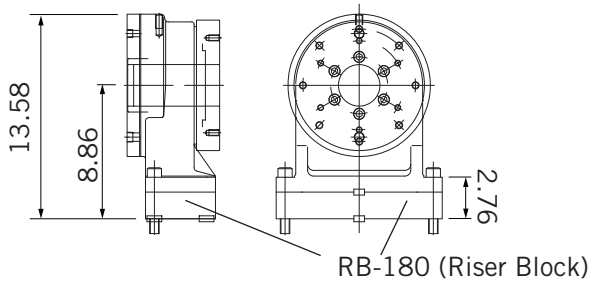

TSR180A(H)** with RB-180 (Riser Block)

MODEL	Center Height	Thru Hole Dia	CLAMPING FORCE (ft-lb)	
			Air Pressure at 71PSI	Hydraulic Pressure at 500PSI
TSR121	4.72	1.57	228	—
TSR142	5.51	1.57	331	—
TSR180A(H)*	7.09	2.76	92	663
TSR180A(H)* with RB-180 (Riser block)	8.86	2.76	92	663

Note: RB-180 (Riser Block) can be purchased separately.
Note: * H means hydraulic unit.
Note: Specify pneumatic or hydraulic for TSR180 when ordering.
Note: ** Above drawing represents TSR180A(H)*with RB-180 (Riser Block). Please refer to the dimensional chart of TSR180A(H) (p230) for specifications not shown in above drawing.

TAIL SUPPORTS
FOR KITAGAWA NC ROTARY TABLES

- **Designed for cradle type rotary tables or indexers**
- **Strong clamping force for heavy duty machining**

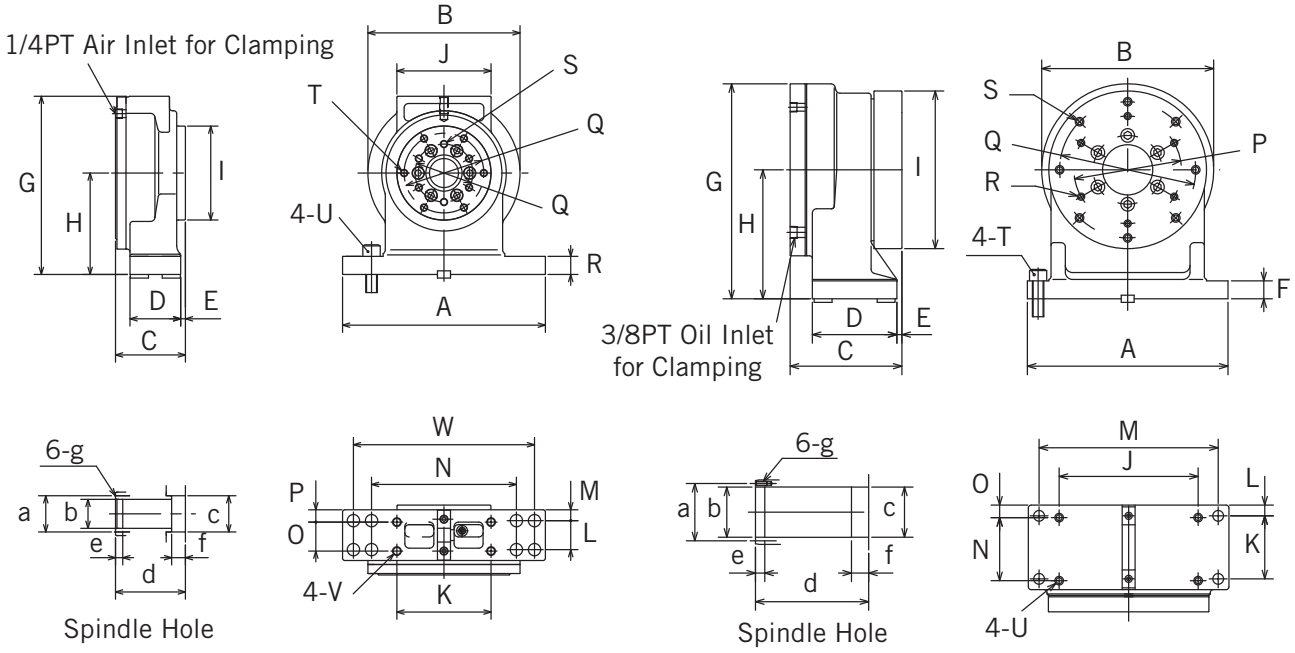

TSR121 and TSR142 TSR180

MODEL	A	B	C	D	E	F	G	H	I
TSR121	9.06	7.48	3.54	2.76	.20	.79	8.50	4.72	4.69
TSR142	11.02	8.27	3.80	2.76	.26	.98	9.69	5.51	5.12
TSR180A(H)	11.02	9.45	6.14	4.65	.28	.98	11.81	7.09	8.66

J	K	L	M	N	O	P	Q	R	S	T
4.72	5.12	1.57	.59	7.87	1.57	.59	3.94	—	—	12-M8
5.12	5.12	1.57	.59	7.87	1.57	.67	4.33	3.15	6-M10	6-M10
7.64	3.46	.59	9.84	3.46	.69	5.91	7.48	6-M10	8-M12	M16×50

U	V	W	a	b	c	d	e	f	g
M16x45	M12	—	1.97	1.5748 H8	1.5748	3.54	.39	.59	M6
M16x50	M12	9.84	1.97	1.5748 H8	1.9685	3.80		.75	
M12	—	—	3.15	2.7559 H8	2.7559	6.10		.94	

Note: Specify pneumatic or hydraulic for TSR180 when ordering.

TAIL SUPPORTS

BASIC MODEL - NO CLAMPING MECHANISM

FOR KITAGAWA NC ROTARY TABLES

• Designed for cradle type rotary tables or indexers

FIG. 1

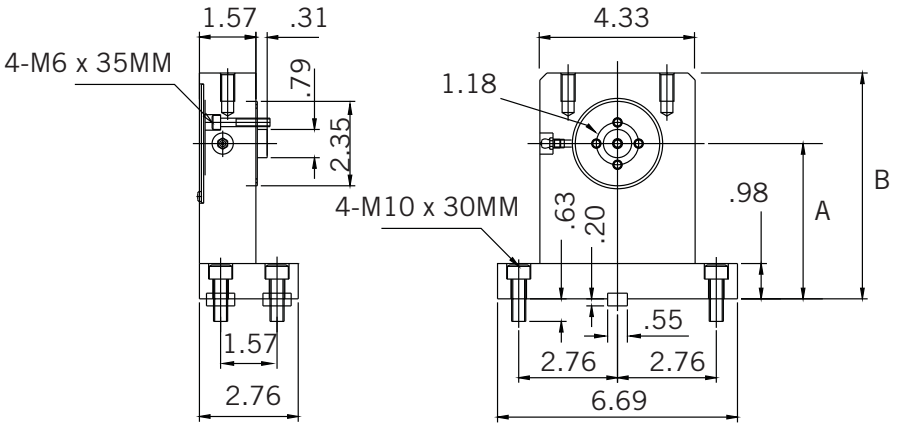

FIG. 2

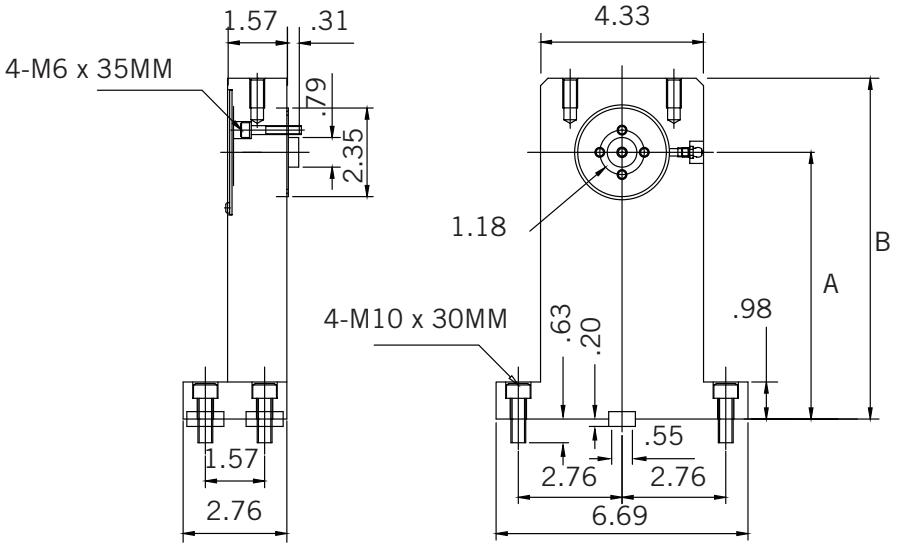

MODEL	A	B	FIG.
TSR-110Z-01	4.33	6.30	1
TSR-120Z-01	4.72	6.70	1
TSR-140Z-01	5.51	7.48	1
TSR-180Z-01	7.09	9.06	2

3 JAW SCROLL CHUCKS

FOR KITAGAWA NC ROTARY TABLES

FIG. 1

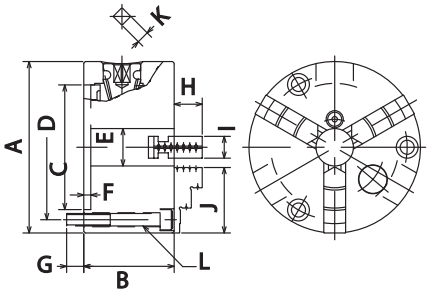

FIG. 2

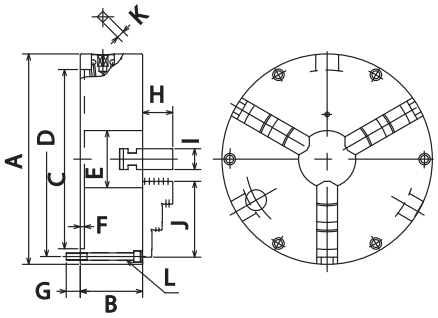

(4Jaw Scroll Chucks are Available Upon Request)

FIG. 3

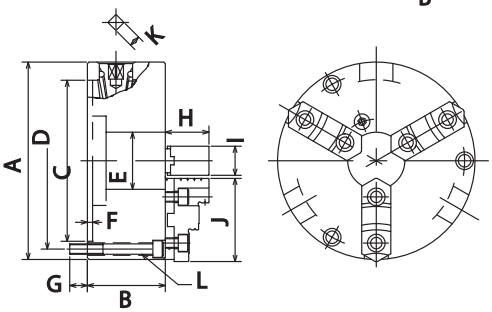

MODEL	KIW NO.	A	B	C	D	E
SC4T	SC-4-105	4.33	2.28	3.1496 H6	3.66	.94
SC5T	SC-5-107	5.12	2.36	3.9370 H6	4.45	1.26
SC6T	JN06T102	6.50	2.56	5.1181 H6	5.71	1.77
SC7T	JN07T102	7.48	2.95	6.1024 H6	6.69	2.17
SC9T	JN09T102	9.13	3.31	7.4803 H6	8.19	2.76
SC12T-4	JN12T131	12.20	3.78	10.2362 H6	11.10	4.13
SC14	SC-14-103	13.98	4.33	11.8110 H6	12.91	3.94
SC16	SC-16-113	15.94	4.72	13.5827 H6	14.76	4.33

F	G	H	I	J	K	L	FIG.
.18	.43	.71	.55	1.65	.31	3-M8	1
.18	.54	.79	.63	1.97	.31	3-M8	1
.20	.47	1.54	1.02	2.68	.39	3-M10	2
.20	.67	1.65	1.10	3.15	.43	3-M10	2
.24	.75	1.97	1.26	3.54	.47	3-M12	2
.28	.73	2.20	1.57	4.53	.55	3-M12	2
.28	1.06	2.05	1.38	5.20	.59	6-M14	3
.31	1.06	2.28	1.57	5.75	.59	6-M14	3

Note: SC-4T, 5T, 6T, 7T, 9T and 12T come with a set of reversible jaws and of soft jaws.
Note: SC-14 and 16 come with 2 sets of hardened solid jaws; 1 set of I.D. and of O.D. chucking jaws.
Note: When applicable, a mounting plate is furnished with scroll chuck. Specify rotary table model when ordering.

AIR BOOSTERS
KITAGAWA NC ROTARY TABLES

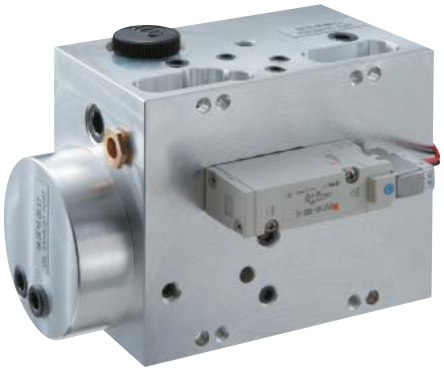

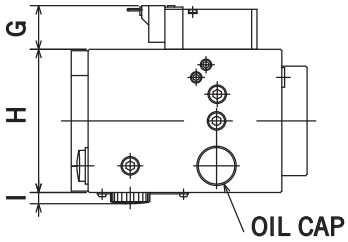

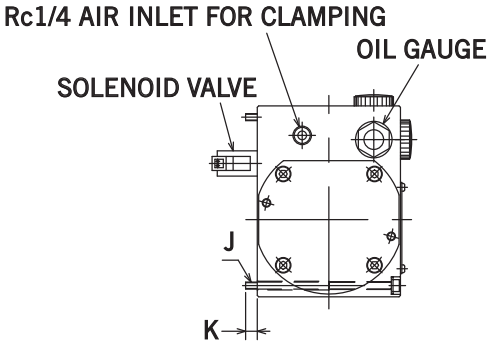

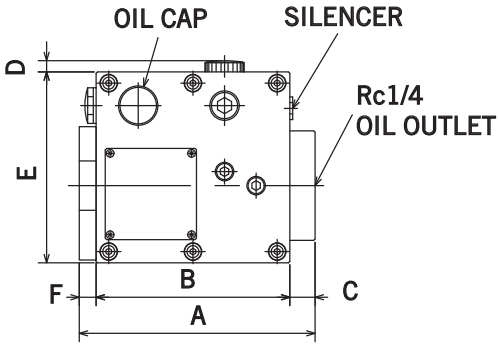

MODEL	NC ROTARY TABLE	AIR PRESSURE (PSI)	MULTIPLE APPLICATION RATIO	HYDRAULIC PRESSURE (PSI)	RECOMMENDED OIL	WEIGHT (LB.)
AB10T	—	57-71	1:7.5	435-543	TURBINE #32	7
AB25T	TT251, 321		1:8	464-580		11
AB50T	TR401, 500, 630					13

MODEL	A	B	C	D	E	F	G	H	I	J	K
AB10T	6.46	5.16	.91	.22	4.09	.39	1.26	3.07	.31	4-M5	.20
AB25T	6.61	5.43	.71	.31	5.35	.47	1.26	4.02	.31	6-M5	.31
AB50T	9.88	6.65	2.76	.31	5.35	.47	1.26	4.02	.31	6-M5	.31

Note: The positions of oil cap and oil gauge can be reversed.
Note: When AB is installed on NC ROTARY TABLE, oil cap must be placed on the top.
Note: Specify AC100V or DC24V for solenoid valve when ordering.

AIR CHUCKS

FOR KITAGAWA NC ROTARY TABLES

- **Cylinder built-in type, specifically designed for NC rotary tables**
- **Easy installation even on rear motor-mount rotary tables**
- **Repeatability within .0012" T.I.R.**

SPECIFICATIONS

MODEL/KIW NO.	JAW TRAVEL (DIA.)	CLAMPING FORCE (LB. at 87 PSI)	MAX AIR PRESSURE (PSI)	SOFT JAWS	CHUCKING DIAMETER		MAX. R.P.M.	WEIGHT (LB.)
					MAX	MIN		
NRC04	.20	1686	101	SB04B1	4.33	.40	100	22
NRC06	.20	4020	101	SB06B1	6.49	.91	72	48.5
NRC08	.25	7283	101	SB08B1	8.26	1.19	60	61
NRC10	.25	10790	101	SB10A1	10.00	1.97	53	93.5

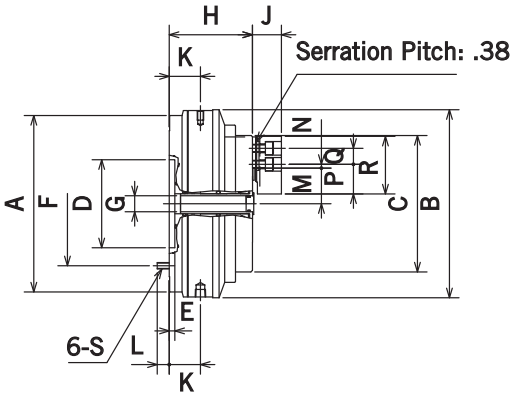

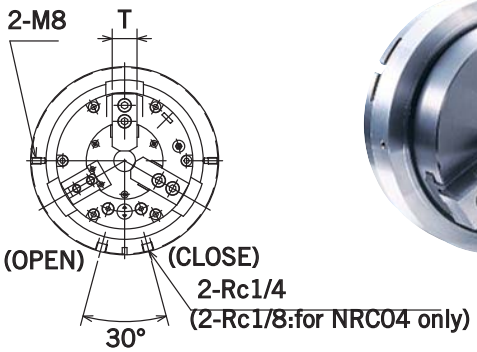

MODEL/KIW NO.	SIZE OF R. TABLE	A	B	C	D	E	F	G	H
NRC04	120, 160, 200	6.18	6.69	4.45	3.150 H7	.24	3.937	—	3.66
NRC06	160, 200, 250	8.68	9.25	6.71	4.331 H7	.28	6.102	.78	4.09
NRC08	250	10.47	11.02	8.5	4.331 H7	.31	7.874	1.18	4.61
NRC10	320	11.93	12.01	9.96	5.512 H7	.31	9.252	1.69	4.72

J	K	L	M(max)	M(min)	N(max)	N(min)	P	Q	R	S	T
1.06	1.30	.55	1.00	.90	.38	.27	1.10	.551	2.17	M6	.91
1.42	1.54	.59	1.75	1.65	.36	.19	1.46	.787	2.83	M8	1.22
1.65	1.63	.67	2.08	1.96	.58	.34	1.81	.984	3.74	M8	1.38
1.81	1.63	.83	2.59	2.47	.75	.33	1.97	1.181	4.33	M10	1.57

AIR CHUCKS
FOR KITAGAWA NC ROTARY TABLES

ADAPTER PLATE MOUNTING ON NC ROTARY TABLES

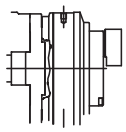	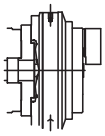	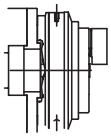	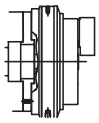	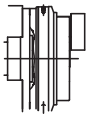
NRC04	NRC06	NRC06	NRC08	NRC10
TMX160 MR120 TMX200 MR160 TBX160 MR200 TBX200	TMX160 TBX200 TMX200 MR160 TBX160 MR200	TMX250 TBX250 MR250	TMX250 TBX250 MR250	TMX320 TBX320 MR320

Note: a mounting plate is furnished with air chuck when applicable. Specify rotary table model when ordering.

ROTARY JOINTS
FOR KITAGAWA NC ROTARY TABLES

- **AIR/HYDRAULIC SUPPLY TO JIGS AND FIXTURES ON THE ROTARY TABLE THRU ROTARY JOINT**

Note: Rotary Joints are factory installed parts. If your application requires Rotary Joints, please specify at the time of Rotary Table order.

ACCESSORY CHART
FOR KITAGAWA ROTARY TABLES

MODEL/KIW NO.	TAIL STOCK	AIR/HYDRAULIC TAILSTOCK	SCROLL CHUCK	AIR CHUCK	ROTARY JOINT	AIR BOOSTER
TC-5C-1/ TC100	TS100	TS100-RSA	SC-4	—	—	—
TC-5C-1A/ TC100-A	TS100	TS100-RSA	SC-4			
TC-5C-2A/ TC2100-A	TS100-2	TS100-2RSA	SC-4			
TC-5C-3A/ TC3100-A	TS100-3	TS100-3RSA	SC-4			
MR120	TS160	TS160-RSA	SC-5	NRC04	RJ32H12Q	
MR160	TS200	TS200-RSA	SC-6T	NRC04	RJ40H16Q	
MR200	TS200	TS200-RSA	SC-7T	NRC06	RJ40H20Q	
MR250	TS250	TS250-RSA	SC-9T	NRC08	RJ70H25Q	
MR320	TS320	TS320-RSA	SC-12T-4	NRC10	RJ70H25M	
TMX160	TS160	TS160-RSH(A)	SC-6T	NRC04,06	RJ40H16D	
TMX200	TS200	TS200-RSH(A)	SC-7T	NRC04,06	RJ40H20D	
TMX250	TS250	TS250-RSH(A)	SC-9T	NRC06,08	RJ70H25D	
TRX320	TS320	TS320-RSH(A)	SC-12T-4	NRC10	RJ70H32K	
TR401	TS400	—	SC-14	—	RJ80H40R	AB50T
TR500	TS500		SC-14		RJ80H	AB50T
TR630	TS630		SC-16		RJ80H	AB50T
TBX160	TS160	TS160-RSA(H)	SC-6T	NRC04,06	—	—
TBX200	TS200	TS200-RSH(A)	SC-7T	NRC04,06	RJ40H20F	
TBX250	TS250	TS250-RSH(A)	SC-9T	NRC06,08	RJ70H25F	
TBX320	TS320	TS320-RSH(A)	SC-12T-4	NRC10	RJ70H32F	

ACCESSORY CHART
FOR KITAGAWA ROTARY TABLES

MODEL/KIW NO.	TAIL STOCK	AIR/HYDRAULIC TAILSTOCK	SCROLL CHUCK	AIR CHUCK	ROTARY JOINT	AIR BOOSTER
TT101	—	—	SC-4	—	RJ32H	—
TT140			SC-4	—	RJ32TT140	
TT(TW)182			SC-6T	NRC06	RJ40FTT182	
TW2180			SC-6T	—	—	
TT(S)251			SC-9T	NRC08	RJ70H25T	AB25T
TT(S)321			SC-12T-4	NRC10	RJ70H32T	AB25T
TM-100-2R/ TM2100	TS100-2	TS100-2RSA	SC-4	—	RJ32H	AB10T
TM-100-3R/ TM3100	TS100-3	TS100-3RSA	SC-4		RJ32H	AB10T
TM-160-2R/ TM2160	TS160-2	TS160-2RSA(H)	SC-6T	NRC04	RJ40H	AB10T
TM-160-3R/ TM3160	TS160-3	TS160-3RSA(H)	SC-6T	NRC04	RJ40H	AB10T
TCM100	TS100	TS100-RSA	SC-4	NRC04	—	—
TCM100A	TS100	TS100-RSA	SC-4	NRC04		
TCM2100A	TS100-2	TS100-2RSA	SC-4	—		
TCM3100A	TS100-3	TS100-3RSA	SC-4			
MRM120	TS160	TS160-RSA	SC-5	NRC04		
MRM160	TS200	TS200-RSA	SC-6T	NRC04		
MRM200	TS200	TS200-RSA	SC-7T	NRC06		
MRM250	TS250	TS250-RSA	SC-9T	NRC08		
MRM320	TS320	TS320-RSA	SC-12T-4	NRC10		

3

LOCATIONS TO SERVE YOUR NEEDS

LOS ANGELES

12535 McCANN DRIVE
SANTA FE SPRINGS, CALIFORNIA 90670
TEL: 562/941-2000 • FAX: 562/946-0506
EMAIL: la@tecnaratools.com
WEBSITE: www.tecnaratools.com

EAST COAST

MID-WEST

Tecnara headquarters is the focal point for our nationwide team of sales engineers and engineering consultants.

visit us at our web site: www.tecnaratools.com

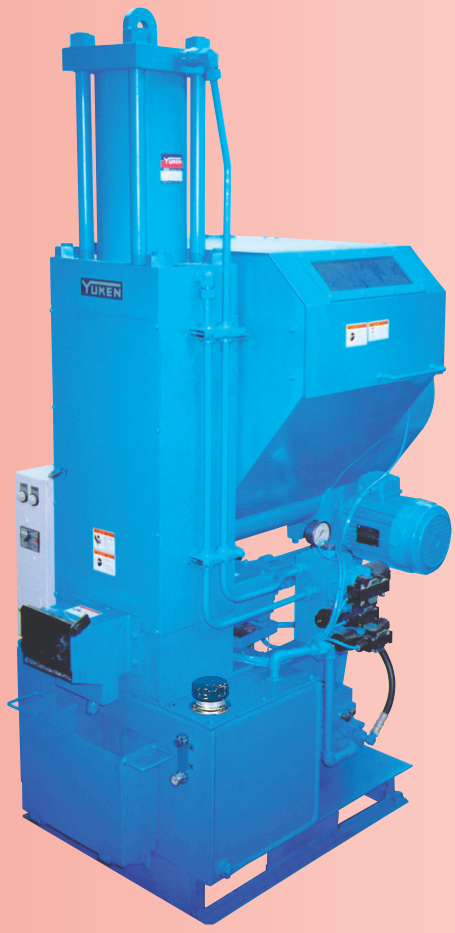

1979 30 years 2009

TECNARA TOOLING SYSTEMS, INC.
MAIN OFFICE
12535 McCann Drive, Santa Fe Springs, CA 90670
Tel: 562-941-2000 • Fax: 562-946-0506 • email: la@tecnaratools.com